DS2155
T1/E1/J1 Single-Chip Transceiver

www.maxim-ic.com

GENERAL DESCRIPTION

The DS2155 is a software-selectable T1, E1, or J1 single-chip transceiver (SCT) for short-haul and long-haul applications. The DS2155 is composed of a line interface unit (LIU), framer, HDLC controllers, and a TDM backplane interface, and is controlled by an 8-bit parallel port configured for Intel or Motorola bus operations. The DS2155 is pin and software compatible with the DS2156.

The LIU is composed of transmit and receive interfaces and a jitter attenuator. The transmit interface is responsible for generating the necessary waveshapes for driving the network and providing the correct source impedance depending on the type of media used. T1 waveform generation includes DSX-1 line buildouts as well as CSU line buildouts of -7.5dB, -15dB, and -22.5dB. E1 waveform generation includes G.703 waveshapes for both 75Ω coax and 120Ω twisted cables. The receive interface provides network termination and recovers clock and data from the network.

APPLICATIONS

T1/E1/J1 Line Cards
Switches and Routers
Add-Drop Multiplexers

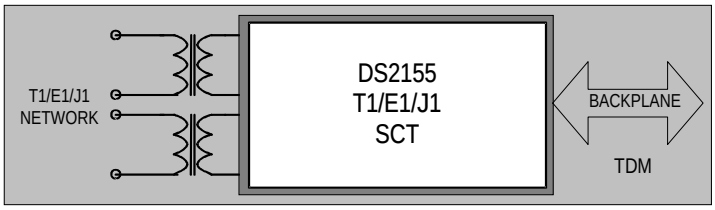

FEATURES

- Complete T1/DS1/ISDN-PRI/J1 Transceiver Functionality
- Complete E1 (CEPT) PCM-30/ISDN-PRI Transceiver Functionality
- Long-Haul and Short-Haul Line Interface for Clock/Data Recovery and Waveshaping
- CMI Coder/Decoder for Optical I/F
- Crystal-Less Jitter Attenuator
- Fully Independent Transmit and Receive Functionality
- Dual HDLC Controllers
- Programmable BERT Generator and Detector
- Internal Software-Selectable Receive and Transmit-Side Termination Resistors for 75Ω/100Ω/120Ω T1 and E1 Interfaces
- Dual Two-Frame Elastic-Store Slip Buffers that Connect to Asynchronous Backplanes Up to 16.384MHz
- 16.384MHz, 8.192MHz, 4.096MHz, or 2.048MHz Clock Output Synthesized to Recovered Network Clock

Features continued in Section 3.

ORDERING INFORMATION

PART	TEMP RANGE	PIN-PACKAGE
DS2155L	0°C to +70°C	100 LQFP
DS2155L+	0°C to +70°C	100 LQFP
DS2155LN	-40°C to +85°C	100 LQFP
DS2155LN+	-40°C to +85°C	100 LQFP
DS2155G	0°C to +70°C	100 CSBGA
DS2155G+	0°C to +70°C	100 CSBGA
DS2155GN	-40°C to +85°C	100 CSBGA
DS2155GN	-40°C to +85°C	100 CSBGA

+ Denotes a lead-free/RoHS-compliant package.

Note: *Some revisions of this device may incorporate deviations from published specifications known as errata. Multiple revisions of any device may be simultaneously available through various sales channels. For information about device errata, click here: www.maxim-ic.com/errata.*

1. TABLE OF CONTENTS

1. TABLE OF CONTENTS 2

1.1 TABLE OF FIGURES 6
1.2 TABLE OF TABLES 7

2. DATA SHEET REVISION HISTORY 8

3. MAIN FEATURES 10

3.1 FUNCTIONAL DESCRIPTION 13
3.2 BLOCK DIAGRAM 15

4. PIN FUNCTION DESCRIPTION 19

4.1 TRANSMIT SIDE 19
4.2 RECEIVE SIDE 21
4.3 PARALLEL CONTROL PORT PINS 24
4.4 EXTENDED SYSTEM INFORMATION BUS 25
4.5 USER OUTPUT PORT PINS 26
4.6 JTAG TEST ACCESS PORT PINS 27
4.7 LINE INTERFACE PINS 28
4.8 SUPPLY PINS 29
4.9 L AND G PACKAGE PINOUT 30
4.10 10MM CSBGA PIN CONFIGURATION 32

5. PARALLEL PORT 33

5.1 REGISTER MAP 33

6. PROGRAMMING MODEL 39

6.1 POWER-UP SEQUENCE 40
6.1.1 Master Mode Register 40
6.2 INTERRUPT HANDLING 41
6.3 STATUS REGISTERS 41
6.4 INFORMATION REGISTERS 42
6.5 INTERRUPT INFORMATION REGISTERS 42

7. SPECIAL PER-CHANNEL REGISTER OPERATION 43

8. CLOCK MAP 45

9. T1 FRAMER/FORMATTER CONTROL AND STATUS REGISTERS 46

9.1 T1 CONTROL REGISTERS 46
9.2 T1 TRANSMIT TRANSPARENCY 51
9.3 AIS-CI AND RAI-CI GENERATION AND DETECTION 51
9.4 T1 RECEIVE-SIDE DIGITAL-MILLIWATT CODE GENERATION 52

10. E1 FRAMER/FORMATTER CONTROL AND STATUS REGISTERS 55

10.1 E1 CONTROL REGISTERS 55
10.2 AUTOMATIC ALARM GENERATION 59
10.3 E1 INFORMATION REGISTERS 60

11. COMMON CONTROL AND STATUS REGISTERS 62

11.1 T1/E1 STATUS REGISTERS 63

12. I/O PIN CONFIGURATION OPTIONS 69

13. LOOPBACK CONFIGURATION 71

13.1 PER-CHANNEL LOOPBACK 73

14. ERROR COUNT REGISTERS 75

14.1 LINE-CODE VIOLATION COUNT REGISTER (LCVCR) 76
14.1.1 T1 Operation 76
14.1.2 E1 Operation 76
14.2 PATH CODE VIOLATION COUNT REGISTER (PCVCR) 78
14.2.1 T1 Operation 78
14.2.2 E1 Operation 78
14.3 FRAMES OUT-OF-SYNC COUNT REGISTER (FOSCR) 79
14.3.1 T1 Operation 79
14.3.2 E1 Operation 79
14.4 E-BIT COUNTER (EBCR) 80

15. DS0 MONITORING FUNCTION 81

16. SIGNALING OPERATION 83

16.1 RECEIVE SIGNALING 83
16.1.1 Processor-Based Signaling 83
16.1.2 Hardware-Based Receive Signaling 84
16.2 TRANSMIT SIGNALING 89
16.2.1 Processor-Based Mode 89
16.2.2 Software Signaling Insertion-Enable Registers, E1 CAS Mode 93
16.2.3 Software Signaling Insertion-Enable Registers, T1 Mode 95
16.2.4 Hardware-Based Mode 95

17. PER-CHANNEL IDLE CODE GENERATION 96

17.1 IDLE-CODE PROGRAMMING EXAMPLES 97

18. CHANNEL BLOCKING REGISTERS 101

19. ELASTIC STORES OPERATION 104

19.1 RECEIVE SIDE 107
19.1.1 T1 Mode 107
19.1.2 E1 Mode 107
19.2 TRANSMIT SIDE 107
19.2.1 T1 Mode 108
19.2.2 E1 Mode 108
19.3 ELASTIC STORES INITIALIZATION 108
19.4 MINIMUM DELAY MODE 108

20. G.706 INTERMEDIATE CRC-4 UPDATING (E1 MODE ONLY) 109

21. T1 BIT-ORIENTED CODE (BOC) CONTROLLER 110

21.1 TRANSMIT BOC 110
Transmit a BOC 110
21.2 RECEIVE BOC 110
Receive a BOC 110

22. ADDITIONAL (SA) AND INTERNATIONAL (SI) BIT OPERATION (E1 ONLY) 113

22.1 METHOD 1: HARDWARE SCHEME 113
22.2 METHOD 2: INTERNAL REGISTER SCHEME BASED ON DOUBLE-FRAME 113
22.3 METHOD 3: INTERNAL REGISTER SCHEME BASED ON CRC4 MULTIFRAME 116

23. HDLC CONTROLLERS 126

23.1 BASIC OPERATION DETAILS 126
23.2 HDLC CONFIGURATION 126
23.2.1 FIFO Control 130
23.3 HDLC MAPPING 131
23.3.1 Receive 131
23.3.2 Transmit 133
23.3.3 FIFO Information 138
23.3.4 Receive Packet-Bytes Available 138
23.3.5 HDLC FIFOs 139
23.4 RECEIVE HDLC CODE EXAMPLE 140
23.5 LEGACY FDL SUPPORT (T1 MODE) 140
23.5.1 Overview 140
23.5.2 Receive Section 140
23.5.3 Transmit Section 142
23.6 D4/SLC-96 OPERATION 142

24. LINE INTERFACE UNIT (LIU) 143

24.1 LIU OPERATION 143
24.2 RECEIVER 143
24.2.1 Receive Level Indicator and Threshold Interrupt 144
24.2.2 Receive G.703 Synchronization Signal (E1 Mode) 144
24.2.3 Monitor Mode 144
24.3 TRANSMITTER 145
24.3.1 Transmit Short-Circuit Detector/Limiter 145
24.3.2 Transmit Open-Circuit Detector 145
24.3.3 Transmit BPV Error Insertion 145
24.3.4 Transmit G.703 Synchronization Signal (E1 Mode) 145
24.4 MCLK PRESCALER 146
24.5 JITTER ATTENUATOR 146
24.6 CMI (CODE MARK INVERSION) OPTION 146
24.7 LIU CONTROL REGISTERS 147
24.8 RECOMMENDED CIRCUITS 156
24.9 COMPONENT SPECIFICATIONS 158

25. PROGRAMMABLE IN-BAND LOOP CODE GENERATION AND DETECTION 163

26. BERT FUNCTION 170

26.1 STATUS 170
26.2 MAPPING 170
26.3 BERT REGISTER DESCRIPTIONS 172
26.4 BERT REPETITIVE PATTERN SET 176
26.5 BERT BIT COUNTER 177
26.6 BERT ERROR COUNTER 178

27. PAYLOAD ERROR-INSERTION FUNCTION (T1 MODE ONLY) 180

27.1 NUMBER-OF-ERRORS REGISTERS 182
27.1.1 Number-of-Errors Left Register 183

28. INTERLEAVED PCM BUS OPERATION (IBO) 184

28.1 CHANNEL INTERLEAVE 184
28.2 FRAME INTERLEAVE 184

29. EXTENDED SYSTEM INFORMATION BUS (ESIB) 187

30. PROGRAMMABLE BACKPLANE CLOCK SYNTHESIZER 191

31. FRACTIONAL T1/E1 SUPPORT 191

32. USER-PROGRAMMABLE OUTPUT PINS 193

33. TRANSMIT FLOW DIAGRAMS 194

34. JTAG BOUNDARY SCAN ARCHITECTURE AND TEST ACCESS PORT 199

34.1 DESCRIPTION 199
34.2 INSTRUCTION REGISTER 202
34.3 TEST REGISTERS 204
34.4 BOUNDARY SCAN REGISTER 204
34.5 BYPASS REGISTER 204
34.6 IDENTIFICATION REGISTER 204

35. FUNCTIONAL TIMING DIAGRAMS 208

35.1 T1 MODE 208
35.2 E1 MODE 213

36. OPERATING PARAMETERS 222

37. AC TIMING PARAMETERS AND DIAGRAMS 224

37.1 MULTIPLEXED BUS AC CHARACTERISTICS 224
37.2 NONMULTIPLEXED BUS AC CHARACTERISTICS 227
37.3 RECEIVE-SIDE AC CHARACTERISTICS 230
37.4 BACKPLANE CLOCK TIMING: AC CHARACTERISTICS 233
37.5 TRANSMIT AC CHARACTERISTICS 234

38. PACKAGE INFORMATION 237

38.1 100-PIN LQFP (56-G5002-000) 237
38.2 100-BALL CSBGA (56-G6008-001) 238

1.1 Table of Figures

Figure 3-1. Block Diagram 15
Figure 3-2. Receive and Transmit LIU 16
Figure 3-3. Receive and Transmit Framer/HDLC 17
Figure 3-4. Backplane Interface 18
Figure 4-1. 10mm CSBGA Pin Configuration 32
Figure 6-1. Programming Sequence 39
Figure 8-1. Clock Map 45
Figure 16-1. Simplified Diagram of Receive Signaling Path 83
Figure 16-2. Simplified Diagram of Transmit Signaling Path 89
Figure 20-1. CRC-4 Recalculate Method 109
Figure 24-1. Typical Monitor Application 144
Figure 24-2. CMI Coding 146
Figure 24-3. Software-Selected Termination, Metallic Protection 156
Figure 24-4. Software-Selected Termination, Longitudinal Protection 157
Figure 24-5. E1 Transmit Pulse Template 159
Figure 24-6. T1 Transmit Pulse Template 159
Figure 24-7. Jitter Tolerance 160
Figure 24-8. Jitter Tolerance (E1 Mode) 160
Figure 24-9. Jitter Attenuation (T1 Mode) 161
Figure 24-10. Jitter Attenuation (E1 Mode) 161
Figure 24-11. Optional Crystal Connections 162
Figure 26-1. Simplified Diagram of BERT in Network Direction 171
Figure 26-2. Simplified Diagram of BERT in Backplane Direction 171
Figure 28-1. IBO Example 186
Figure 29-1. ESIB Group of Four DS2155s 187
Figure 33-1. T1 Transmit Flow Diagram 194
Figure 33-2. E1 Transmit Flow Diagram 195
Figure 34-1. JTAG Functional Block Diagram 199
Figure 34-2. TAP Controller State Diagram 202
Figure 35-1. Receive-Side D4 Timing 208
Figure 35-2. Receive-Side ESF Timing 208
Figure 35-3. Receive-Side Boundary Timing (Elastic Store Disabled) 209
Figure 35-4. Receive-Side 1.544MHz Boundary Timing (Elastic Store Enabled) 209
Figure 35-5. Receive-Side 2.048MHz Boundary Timing (Elastic Store Enabled) 210
Figure 35-6. Transmit-Side D4 Timing 210
Figure 35-7. Transmit-Side ESF Timing 211
Figure 35-8. Transmit-Side Boundary Timing (with Elastic Store Disabled) 211
Figure 35-9. Transmit-Side 1.544MHz Boundary Timing (Elastic Store Enabled) 212
Figure 35-10. Transmit-Side 2.048MHz Boundary Timing (Elastic Store Enabled) 212
Figure 35-11. Receive-Side Timing 213
Figure 35-12. Receive-Side Boundary Timing (with Elastic Store Disabled) 213
Figure 35-13. Receive-Side Boundary Timing, RSYSCLK = 1.544MHz (Elastic Store Enabled) 214
Figure 35-14. Receive-Side Boundary Timing, RSYSCLK = 2.048MHz (Elastic Store Enabled) 214
Figure 35-15. Receive IBO Channel Interleave Mode Timing 215
Figure 35-16. Receive IBO Frame Interleave Mode Timing 216
Figure 35-17. G.802 Timing, E1 Mode Only 217
Figure 35-18. Transmit-Side Timing 217
Figure 35-19. Transmit-Side Boundary Timing (Elastic Store Disabled) 218
Figure 35-20. Transmit-Side Boundary Timing, TSYSCLK = 1.544MHz (Elastic Store Enabled) 218
Figure 35-21. Transmit-Side Boundary Timing, TSYSCLK = 2.048MHz (Elastic Store Enabled) 219
Figure 35-22. Transmit IBO Channel Interleave Mode Timing 220

Figure 35-23. Transmit IBO Frame Interleave Mode Timing 221
Figure 37-1. Intel Multiplexed Bus Read Timing (BTS = 0/MUX = 1) 225
Figure 37-2. Intel Multiplexed Bus Write Timing (BTS = 0/MUX = 1) 225
Figure 37-3. Motorola Multiplexed Bus Timing (BTS = 1/MUX = 1) 226
Figure 37-4. Intel Nonmultiplexed Bus Read Timing (BTS = 0/MUX = 0) 228
Figure 37-5. Intel Nonmultiplexed Bus Write Timing (BTS = 0/MUX = 0) 228
Figure 37-6. Motorola Nonmultiplexed Bus Read Timing (BTS = 1/MUX = 0) 229
Figure 37-7. Motorola Nonmultiplexed Bus Write Timing (BTS = 1/MUX = 0) 229
Figure 37-8. Receive-Side Timing 231
Figure 37-9. Receive-Side Timing, Elastic Store Enabled 232
Figure 37-10. Receive Line Interface Timing 232
Figure 37-11 Receive Timing Delay RCLK to BPCLK 233
Figure 37-12. Transmit-Side Timing 235
Figure 37-13. Transmit-Side Timing, Elastic Store Enabled 236
Figure 37-14. Transmit Line Interface Timing 236

1.2 Table of Tables

Table 4-A. Pin Description Sorted by Pin Number 30
Table 5-A. Register Map Sorted by Address 33
Table 9-A. T1 Alarm Criteria 54
Table 10-A. E1 Sync/Resync Criteria 56
Table 10-B. E1 Alarm Criteria 61
Table 14-A. T1 Line Code Violation Counting Options 76
Table 14-B. E1 Line-Code Violation Counting Options 76
Table 14-C. T1 Path Code Violation Counting Arrangements 78
Table 14-D. T1 Frames Out-of-Sync Counting Arrangements 79
Table 16-A. Time Slot Numbering Schemes 90
Table 17-A. Idle-Code Array Address Mapping 96
Table 17-B. GRIC and GTIC Functions 98
Table 19-A. Elastic Store Delay After Initialization 108
Table 23-A. HDLC Controller Registers 127
Table 24-A. Component List (Software-Selected Termination, Metallic Protection) 156
Table 24-B. Component List (Software-Selected Termination, Longitudinal Protection) 157
Table 24-C. Transformer Specifications 158
Table 27-A. Transmit Error-Insertion Setup Sequence 180
Table 27-B. Error Insertion Examples 182
Table 34-A. Instruction Codes for IEEE 1149.1 Architecture 203
Table 34-B. ID Code Structure 204
Table 34-C. Device ID Codes 204
Table 34-D. Boundary Scan Control Bits 205

2. DATA SHEET REVISION HISTORY

REVISION	DESCRIPTION
080607	In *Section 3: Line Interface* and *Section 3.1: Functional Description*, corrected dB values for E1 and T1 (page 10 and page 13): E1: 0 to -43dB and 0 to -12dB T1: 0 to -15dB and 0 to -36dB
040907	Added Note 1 (GBD for cold temp) to *Absolute Maximum Ratings* (Section 36).
041806	Replaced Figure 24-3 and Figure 24-4, added Table 24-A and Table 24-B.
011606	Added lead-free packages to Ordering Information table on page 1.
100903	Add revision history table: The previous version of the DS2155 data sheet (12-06-02) did not incorporate a revision history table and did not describe new features added to B1 revision of the DS2155.
	THE FOLLOWING WERE INADVERTENTLY REMOVED FROM THE PREVIOUS VERSION OF THE DS2155 DATA SHEET:
	Add CSBGA package information to Ordering Information table on front page
	Add CSBGA package thermal characteristics to Operating Parameters section
	Add Transmit Line Build Out Control register (TLBC) description
	Add Transmit Line Build Out Control register (TLBC) to Port Map
	Add Transmit Line Build Out Control register (TLBC) description to LIU TRANSMIT section
	THE FOLLOWING ARE CORRECTIONS TO ERRORS IN THE PREVIOUS VERSION OF THE DS2155 DATA SHEET:
	Correct Device ID in Device Identification Register
	Correct Device ID in JTAG ID Code table
	Correct minimum value for t_{DHW} in AC CHARACTERISTICS: MULTIPLEXED PARALLEL PORT table. t_{DHW} was changed from 5ns to 0ns
	Correct minimum value for t_{DDR} in AC CHARACTERISTICS: MULTIPLEXED PARALLEL PORT table. t_{DDR} was changed from unstated to 20ns
	Corrections to AC CHARACTERISTICS: TRANSMIT SIDE timing table. 1. t_{CP}, t_{CH}, t_{CL}, t_{LP}, t_{LH}, t_{LL}, and t_{SP} typical values have been restated to reflect various IBO modes. 2. t_{CH}, t_{CL}, t_{LH}, t_{LL} minimum values have been changed from 75ns to 20ns. 3. t_{SP}, t_{LL} minimum values have been changed from 50ns to 20ns. 4. t_{D3} minimum values have been changed from 75ns to 22ns.
	Corrections to AC CHARACTERISTICS: RECEIVE SIDE timing table. 1. t_{CP}, t_{CH}, t_{CL}, t_{LP}, t_{LH}, t_{LL}, and t_{SP} typical values have been restated to reflect various IBO modes. 2. t_{CH}, t_{CL}, minimum values have been changed from 75ns to 20ns. 3. t_{SH}, t_{SL} minimum values have been changed from 50ns to 20ns. 4. t_{SH}, t_{SL} typical values have been added. 5. t_{D3}, t_{D4} minimum values have been changed from 50ns to 22ns.
	Correct Transmit Signaling Registers (E1 Mode, CCS Format) table in Transmit Signaling section

REVISION	DESCRIPTION
	The definition of the EGL bit in the LIC1 register has been corrected for both T1 and E1 mode. T1 Mode: EGL = 1 was changed from 15dB to –15dB E1 Mode: EGL = 0 was changed from –10dB to –12dB
	THE FOLLOWING ARE FORMAT CHANGES AND ADDED OR REMOVED TEXT, TABLES OR DIAGRAMS:
	Replace X* format for showing active low signals with $\overline{X}$
	Remove redundant statements about “multiport configurations” in Interrupt Handling section
	Remove BASIC NETWORK CONNECTIONS figure in LINE INTERFACE UNIT section
	Add “Simplified Diagram of BERT in Network Direction” figure to BERT section
	Add “Simplified Diagram of BERT in Backplane Direction” figure to BERT section
	Add Receive Signaling Registers (E1 Mode, CCS Format) table to Receive Signaling section
	Add GRIC and GTIC function table to IAAR register
	Changed Table of contents to include table of figures and table of tables.
	Add note for FASRC bit.
	Add T1 and E1 Transmit Flow Chart.
	Added RCLK to BPCLK timing diagram.
	THE FOLLOWING ARE NEW FEATURES AVAILABLE ON THE DS2155 REV B1 AND ARE EXPLAINED IN THE BODY OF THE DATA SHEET
	Add FRAS0, TCCS, RCCS and GRSRE bits to Signaling Control Register (SIGCR)
	Add section on AIS-CI and RAI-CI Generation and Detection
	Add RAIS-CI status bit to Status Register 4 (SR4) and Interrupt Mask Register 4 (IMR4)
	Add RAIS-CI status bit to Status Register 4 (SR4)
	Add TRAI-CI control bit to T1 Common Control Register 1 (TCCR1)
	Add TAIS-CI control bit to T1 Common Control Register 1 (TCCR1)
	Add Pseudorandom 2E9-1 pattern to PS0, PS1 and PS2 bit description in Bert Control Register 1 (BCR1)
	Add BD bit to Information Register 2 (INFO2)
	Add ILUT status bit to Status Register 1 (SR1) and Interrupt Mask Register 1 (IMR1)
	Add INTDIS and TMSS bits to Common Control Register 3 (CCR3)

3. MAIN FEATURES

The DS2155 contains all of the features of the previous generation of Dallas Semiconductor's T1 and E1 SCTs plus many new features.

General

- Programmable output clocks for fractional T1, E1, H0, and H12 applications
- Interleaving PCM bus operation
- 8-bit parallel control port, multiplexed or nonmultiplexed, Intel or Motorola
- IEEE 1149.1 JTAG-Boundary Scan
- 3.3V supply with 5V tolerant inputs and outputs
- Pin compatible with DS2156, DS2152/DS2154, and DS21x5Y SCT family
- Signaling System 7 Support
- RAI-CI, AIS-CI support
- 100-pin LQFP (14mm x 14mm) (DS2155L)
- 100-pin CSBGA (10mm x 10mm) (DS2155G)
- 3.3V supply with 5V tolerant inputs and outputs
- Evaluation kits
- IEEE 1149.1 JTAG boundary scan
- Driver source code available from the factory

Line Interface

- Requires only a 2.048MHz master clock for both E1 and T1 operation with the option to use 1.544MHz for T1 operation
- Fully software configurable
- Short-haul and long-haul applications
- Automatic receive sensitivity adjustments
- Ranges include 0 to -43dB or 0 to -12dB for E1 applications and 0 to -15dB or 0 to -36dB for T1 applications
- Receive level indication in 2.5dB steps from -42.5dB to -2.5dB
- Internal receive termination option for 75Ω, 100Ω, and 120Ω lines
- Internal transmit termination option for 75Ω, 100Ω, and 120Ω lines
- Monitor application gain settings of 20dB, 26dB, and 32dB
- G.703 receive synchronization-signal mode
- Flexible transmit waveform generation
- T1 DSX-1 line buildouts
- T1 CSU line buildouts of -7.5dB, -15dB, and -22.5dB
- E1 waveforms include G.703 waveshapes for both 75Ω coax and 120Ω twisted cables
- AIS generation independent of loopbacks
- Alternating ones and zeros generation
- Square-wave output
- Open-drain output option
- NRZ format option
- Transmitter power-down
- Transmitter 50mA short-circuit limiter with current-limit-exceeded indication
- Transmit open-circuit-detected indication
- Line interface function can be completely decoupled from the framer/formatter

Clock Synthesizer

- Output frequencies include 2.048MHz, 4.096MHz, 8.192MHz, and 16.384MHz
- Derived from recovered receive clock

Jitter Attenuator

- 32-bit or 128-bit crystal-less jitter attenuator
- Requires only a 2.048MHz master clock for both E1 and T1 operation with the option to use 1.544MHz for T1 operation
- Can be placed in either the receive or transmit path or disabled
- Limit trip indication

Framer/Formatter

- Fully independent transmit and receive functionality
- Full receive and transmit path transparency
- T1 framing formats include D4 (SLC-96) and ESF
- Detailed alarm and status reporting with optional interrupt support
- Large path and line error counters for:
  - T1: BPV, CV, CRC6, and framing bit errors
  - E1: BPV, CV, CRC4, E-bit, and frame alignment errors
- Timed or manual update modes
- DS1 idle code generation on a per-channel basis in both transmit and receive paths
  - User-defined
  - Digital milliwatt
- ANSI T1.403-1998 Support
- RAI-CI detection and generation
- AIS-CI detection and generation
- E1ETS 300 011 RAI generation
- G.965 V5.2 link detect
- Ability to monitor one DS0 channel in both the transmit and receive paths
- In-band repeating pattern generators and detectors
  - Three independent generators and detectors
  - Patterns from 1 to 8 bits or 16 bits in length
- RCL, RLOS, RRA, and RAIS alarms interrupt on change-of-state

- Flexible signaling support
  - Software or hardware based
  - Interrupt generated on change of signaling data
  - Receive signaling freeze on loss-of-sync, carrier loss, or frame slip
- Addition of hardware pins to indicate carrier loss and signaling freeze
- Automatic RAI generation to ETS 300 011 specifications
- Access to Sa and Si bits
- Option to extend carrier loss criteria to a 1ms period as per ETS 300 233
- Japanese J1 support
  - Ability to calculate and check CRC6 according to the Japanese standard
  - Ability to generate Yellow Alarm according to the Japanese standard

TDM Bus

- Dual two-frame independent receive and transmit elastic stores
  - Independent control and clocking
  - Controlled slip capability with status
  - Minimum delay mode supported
- 16.384MHz maximum backplane burst rate
- Supports T1 to CEPT (E1) conversion
- Programmable output clocks for fractional T1, E1, H0, and H12 applications
- Interleaving PCM bus operation
- Hardware signaling capability
  - Receive signaling reinsertion to a backplane multiframe sync
  - Availability of signaling in a separate PCM data stream
  - Signaling freezing
- Ability to pass the T1 F-bit position through the elastic stores in the 2.048MHz backplane mode
- Access to the data streams in between the framer/formatter and the elastic stores
- User-selectable synthesized clock output

HDLC Controllers

- Two independent HDLC controllers
- Fast load and unload features for FIFOs
- SS7 support for FISU transmit and receive
- Independent 128-byte Rx and Tx buffers with interrupt support
- Access FDL, Sa, or single/multiple DS0 channels
- DS0 access includes Nx64 or Nx56
- Compatible with polled or interrupt driven environments
- Bit-oriented code (BOC) support

Test and Diagnostics

- Programmable on-chip bit error-rate testing
- Pseudorandom patterns including QRSS
- User-defined repetitive patterns
- Daly pattern
- Error insertion single and continuous
- Total bit and errored bit counts
- Payload error insertion
- Error insertion in the payload portion of the T1 frame in the transmit path
- Errors can be inserted over the entire frame or selected channels
- Insertion options include continuous and absolute number with selectable insertion rates
- F-bit corruption for line testing
- Loopbacks: remote, local, analog, and per-channel loopback

Extended System Information Bus

- Host can read interrupt and alarm status on up to 8 ports with a single bus read

User-Programmable Output Pins

- Four user-defined output pins for controlling external logic

Control Port

- 8-bit parallel control port
- Multiplexed or nonmultiplexed buses
- Intel or Motorola formats
- Supports polled or interrupt environments
- Software access to device ID and silicon revision
- Software reset supported
  - Automatic clear on power-up
- Hardware reset pin

The DS2155 is compliant with the following standards:

ANSI:	T1.403-1995, T1.231–1993, T1.408
AT&T:	TR54016, TR62411
ITU:	G.703, G.704, G.706, G.736, G.775, G.823, G.932, I.431, O.151, Q.161
ITU-T:	Recommendation I.432–03/93 B-ISDN User-Network Interface—Physical Layer Specification
ETSI:	ETS 300 011, ETS 300 166, ETS 300 233, CTR12, CTR4
Japanese:	JTG.703, JTI.431, JJ-20.11 (CMI Coding Only)

3.1 Functional Description

The DS2155 is a software-selectable T1, E1, or J1 single-chip transceiver (SCT) for short-haul and long-haul applications. The DS2155 is composed of an LIU, framer, HDLC controllers, and a TDM backplane interface, and is controlled by an 8-bit parallel port configured for Intel or Motorola bus operations. The DS2155 is pin and software compatible with the DS2156.

The LIU is composed of transmit and receive interfaces and a jitter attenuator. The transmit interface is responsible for generating the necessary waveshapes for driving the network and providing the correct source impedance depending on the type of media used. T1 waveform generation includes DSX-1 line buildouts as well as CSU line buildouts of -7.5dB, -15dB, and -22.5dB. E1 waveform generation includes G.703 waveshapes for both 75Ω coax and 120Ω twisted cables. The receive interface provides network termination and recovers clock and data from the network. The receive sensitivity adjusts automatically to the incoming signal and can be programmed for 0 to -43dB or 0 to -12dB for E1 applications and 0 to -15dB or 0 to -36dB for T1 applications. The jitter attenuator removes phase jitter from the transmitted or received signal. The crystal-less jitter attenuator requires only a 2.048MHz MCLK for both E1 and T1 applications (with the option of using a 1.544MHz MCLK in T1 applications) and can be placed in either transmit or receive data paths. An additional feature of the LIU is a CMI coder/decoder for interfacing to optical networks.

On the transmit side, clock, data, and frame-sync signals are provided to the framer by the backplane interface section. The framer inserts the appropriate synchronization framing patterns, alarm information, calculates and inserts the CRC codes, and provides the B8ZS/HDB3 (zero code suppression) and AMI line coding. The receive-side framer decodes AMI, B8ZS, and HDB3 line coding, synchronizes to the data stream, reports alarm information, counts framing/coding/CRC errors, and provides clock/data and frame-sync signals to the backplane interface section.

Both the transmit and receive path have two HDLC controllers. The HDLC controllers transmit and receive data through the framer block. The HDLC controllers can be assigned to any time slot, group of time slots, portion of a time slot or to FDL (T1) or Sa bits (E1). Each controller has 128-byte FIFOs, thus reducing the amount of processor overhead required to manage the flow of data. In addition, built-in support for reducing the processor time is required in SS7 applications.

The backplane interface provides a versatile method of sending and receiving data from the host system. Elastic stores provide a method for interfacing to asynchronous systems, converting from a T1/E1 network to a 2.048MHz, 4.096MHz, 8.192MHz, or N x 64kHz system backplane. The elastic stores also manage slip conditions (asynchronous interface). An interleave bus option (IBO) is provided to allow up to eight transceivers to share a high-speed backplane.

The parallel port provides access for control and configuration of the DS2155's features. The extended system information bus (ESIB) function allows up to eight transceivers to be accessed by a single read for interrupt status or other user-selectable alarm status information. Diagnostic capabilities include loopbacks, PRBS pattern generation/detection, and 16-bit loop-up and loop-down code generation and detection.

Reader's Note: This data sheet assumes a particular nomenclature of the T1 operating environment. In each 125µs frame there are 24 8-bit channels plus a framing bit. It is assumed that the framing bit is sent first followed by channel 1. Each channel is made up of eight bits that are numbered 1 to 8. Bit number 1 is the MSB and is transmitted first. Bit number 8 is the LSB and is transmitted last. The term "locked" is used to refer to two clock signals that are phase- or frequency-locked or derived from a common clock (i.e., a 1.544MHz clock can be locked to a 2.048MHz clock if they share the same 8kHz component). Throughout this data sheet, the following abbreviations are used:

B8ZS	Bipolar with 8 Zero Substitution
BOC	Bit-Oriented Code
CRC	Cyclical Redundancy Check
D4	Superframe (12 frames per multiframe) Multiframe Structure
ESF	Extended Superframe (24 frames per multiframe) Multiframe Structure
FDL	Facility Data Link
FPS	Framing Pattern Sequence in ESF
Fs	Signaling Framing Pattern in D4
Ft	Terminal Framing Pattern in D4
HDLC	High-Level Data Link Control
MF	Multiframe
SLC–96	Subscriber Loop Carrier—96 Channels

3.2 Block Diagram

Figure 3-1 shows a simplified block diagram featuring the major components of the DS2155. Details are shown in subsequent figures. The block diagram is divided into three functional blocks: LIU, FRAMER, and BACKPLANE INTERFACE.

Figure 3-1. Block Diagram

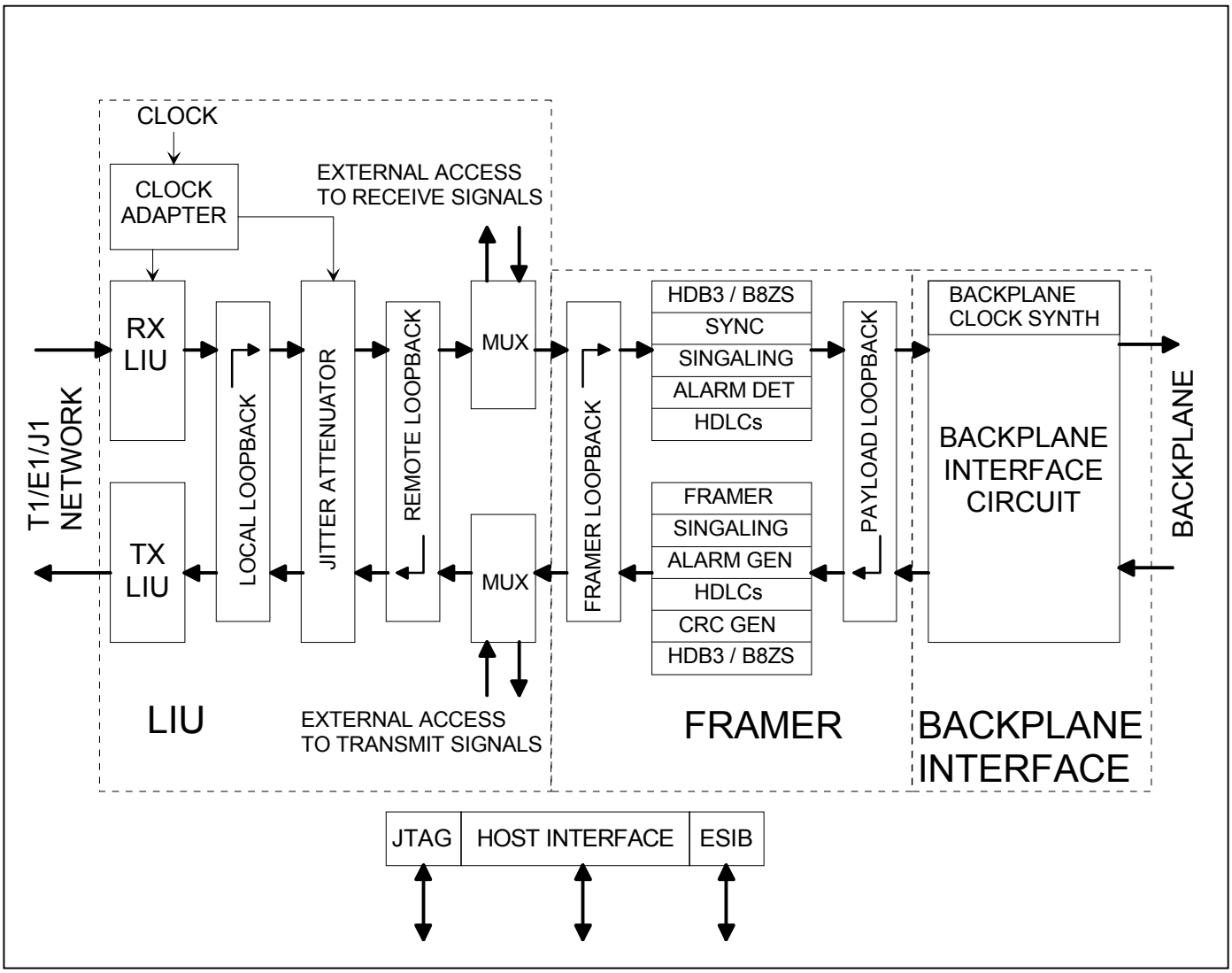

Figure 3-2. Receive and Transmit LIU

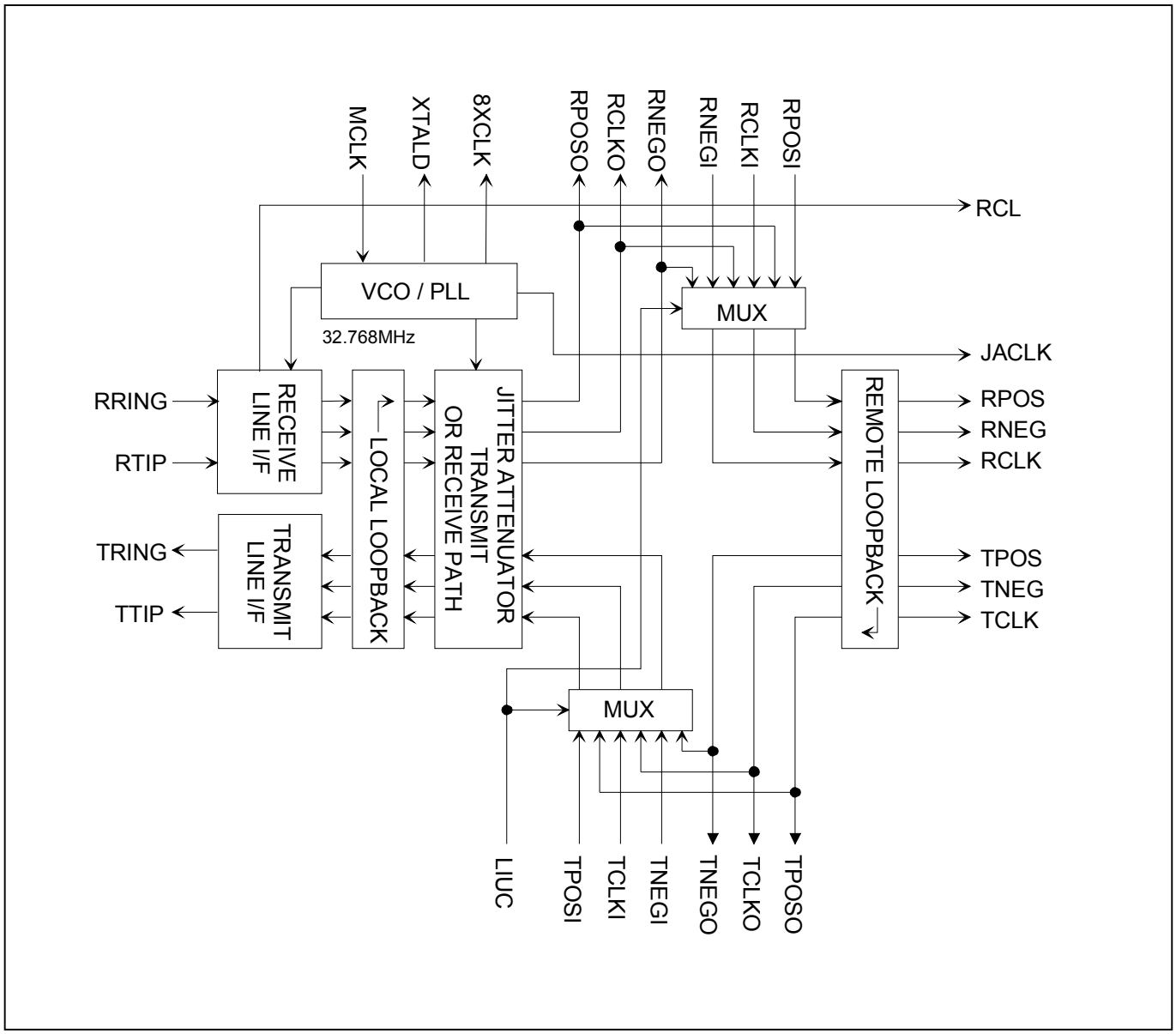

Figure 3-3. Receive and Transmit Framer/HDLC

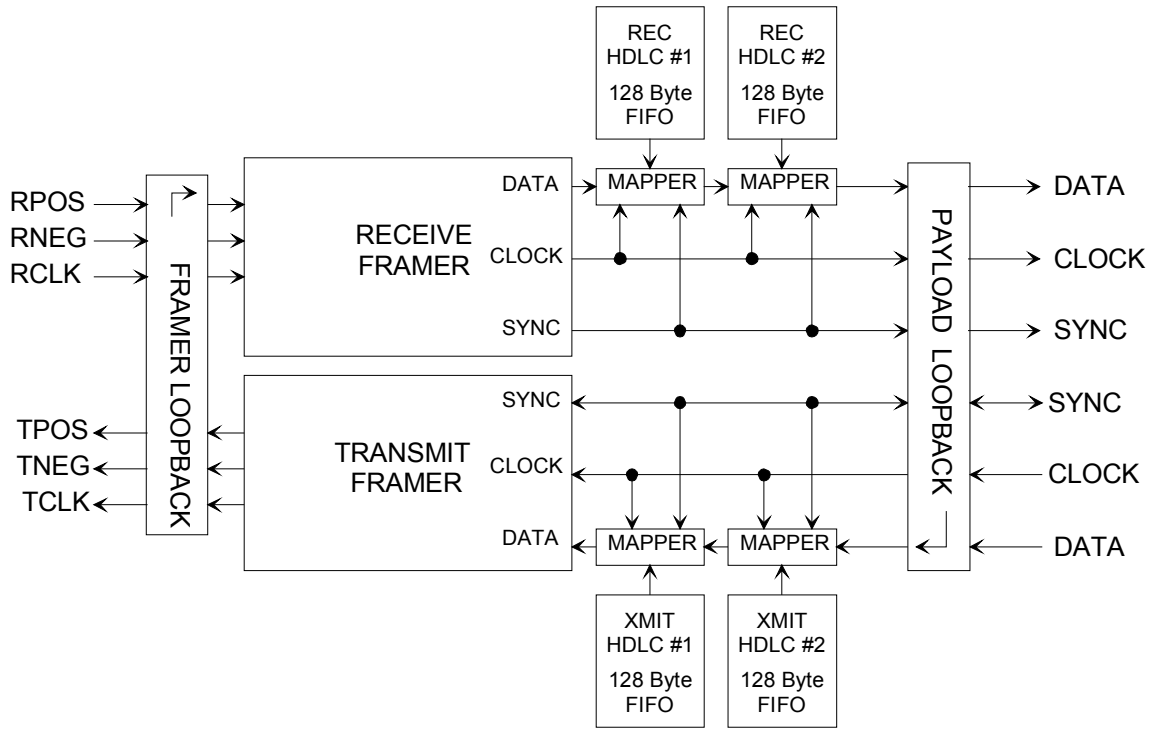

Figure 3-4. Backplane Interface

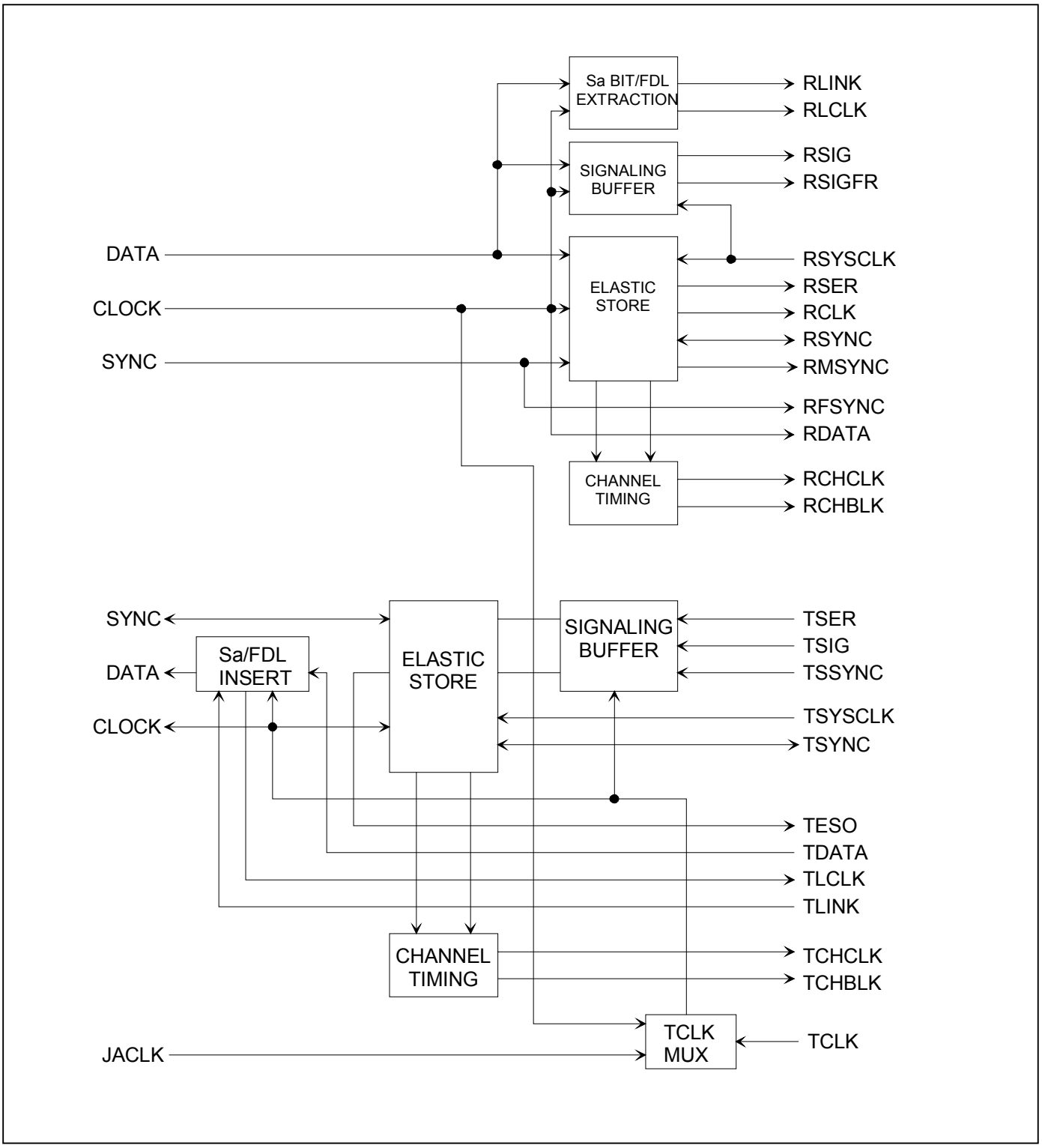

4. PIN FUNCTION DESCRIPTION

4.1 Transmit Side

Signal Name: **TCLK**
Signal Description: **Transmit Clock**
Signal Type: **Input**
A 1.544MHz (T1) or a 2.048MHz (E1) primary clock. Used to clock data through the transmit-side formatter. TCLK can be internally sourced from MCLK. This is the most flexible method and requires only a single clock signal for both T1 or E1. If internal sourcing is used, then the TCLK pin should be connected low.

Signal Name: **TSER**
Signal Description: **Transmit Serial Data**
Signal Type: **Input**
Transmit NRZ serial data. Sampled on the falling edge of TCLK when the transmit-side elastic store is disabled. Sampled on the falling edge of TSYSCLK when the transmit-side elastic store is enabled.

Signal Name: **TCHCLK**
Signal Description: **Transmit Channel Clock**
Signal Type: **Output**
A 192kHz (T1) or 256kHz (E1) clock that pulses high during the LSB of each channel. Can also be programmed to output a gated transmit bit clock on a per-channel basis. Synchronous with TCLK when the transmit-side elastic store is disabled. Synchronous with TSYSCLK when the transmit-side elastic store is enabled. Useful for parallel-to-serial conversion of channel data.

Signal Name: **TCHBLK**
Signal Description: **Transmit Channel Block**
Signal Type: **Output**
A user-programmable output that can be forced high or low during any of the channels. Synchronous with TCLK when the transmit-side elastic store is disabled. Synchronous with TSYSCLK when the transmit-side elastic store is enabled. Useful for blocking clocks to a serial UART or LAPD controller in applications where not all channels are used such as Fractional T1, Fractional E1, 384kbps (H0), 768kbps, or ISDN–PRI. Also useful for locating individual channels in drop-and-insert applications, for external per-channel loopback, and for per-channel conditioning.

Signal Name: **TSYSCLK**
Signal Description: **Transmit System Clock**
Signal Type: **Input**
1.544MHz, 2.048MHz, 4.096MHz, 8.192MHz, or 16.384MHz clock. Only used when the transmit-side elastic store function is enabled. Should be connected low in applications that do not use the transmit-side elastic store. See Section 28 for details on 4.096MHz, 8.192MHz, and 16.384MHz operation using the IBO.

Signal Name: **TLCLK**
Signal Description: **Transmit Link Clock**
Signal Type: **Output**
Demand clock for the transmit link data [TLINK] input.
T1 Mode: A 4kHz or 2kHz (ZBTSI) clock.
E1 Mode: A 4kHz to 20kHz clock.

Signal Name: **TLINK**
Signal Description: **Transmit Link Data**
Signal Type: **Input**
If enabled, this pin is sampled on the falling edge of TCLK for data insertion into either the FDL stream (ESF) or the Fs-bit position (D4), or the Z-bit position (ZBTSI) or any combination of the Sa-bit positions (E1).

Signal Name: **TSYNC**
Signal Description: **Transmit Sync**
Signal Type: **Input/Output**
A pulse at this pin establishes either frame or multiframe boundaries for the transmit side. Can be programmed to output either a frame or multiframe pulse. If this pin is set to output pulses at frame boundaries, it can also be set by IOCR1.3 to output double-wide pulses at signaling frames in T1 mode.

Signal Name: **TSSYNC**
Signal Description: **Transmit System Sync**
Signal Type: **Input**
Only used when the transmit-side elastic store is enabled. A pulse at this pin establishes either frame or multiframe boundaries for the transmit side. Should be connected low in applications that do not use the transmit-side elastic store.

Signal Name: **TSIG**
Signal Description: **Transmit Signaling Input**
Signal Type: **Input**
When enabled, this input samples signaling bits for insertion into outgoing PCM data stream. Sampled on the falling edge of TCLK when the transmit-side elastic store is disabled. Sampled on the falling edge of TSYSCLK when the transmit-side elastic store is enabled.

Signal Name: **TESO**
Signal Description: **Transmit Elastic Store Data Output**
Signal Type: **Output**
Updated on the rising edge of TCLK with data out of the transmit-side elastic store whether the elastic store is enabled or not. This pin is normally connected to TDATA.

Signal Name: **TDATA**
Signal Description: **Transmit Data**
Signal Type: **Input**
Sampled on the falling edge of TCLK with data to be clocked through the transmit-side formatter. This pin is normally connected to TESO.

Signal Name: **TPOSO**
Signal Description: **Transmit Positive-Data Output**
Signal Type: **Output**
Updated on the rising edge of TCLKO with the bipolar data out of the transmit-side formatter. Can be programmed to source NRZ data by the output data format (IOCR1.0) control bit. This pin is normally connected to TPOSI.

Signal Name: **TNEGO**
Signal Description: **Transmit Negative-Data Output**
Signal Type: **Output**
Updated on the rising edge of TCLKO with the bipolar data out of the transmit-side formatter. This pin is normally connected to TNEGI.

Signal Name: **TCLKO**

Signal Description: **Transmit Clock Output**
Signal Type: **Output**
Buffered clock that is used to clock data through the transmit-side formatter (i.e., either TCLK or RCLKI). This pin is normally connected to TCLKI.

Signal Name: **TPOSI**
Signal Description: **Transmit Positive-Data Input**
Signal Type: **Input**
Sampled on the falling edge of TCLKI for data to be transmitted out onto the T1 line. Can be internally connected to TPOSO by connecting the LIUC pin high. TPOSI and TNEGI can be connected together in NRZ applications.

Signal Name: **TNEGI**
Signal Description: **Transmit Negative-Data Input**
Signal Type: **Input**
Sampled on the falling edge of TCLKI for data to be transmitted out onto the T1 line. Can be internally connected to TNEGO by connecting the LIUC pin high. TPOSI and TNEGI can be connected together in NRZ applications.

Signal Name: **TCLKI**
Signal Description: **Transmit Clock Input**
Signal Type: **Input**
Line interface transmit clock. Can be internally connected to TCLKO by connecting the LIUC pin high.

4.2 Receive Side

Signal Name: **RLINK**
Signal Description: **Receive Link Data**
Signal Type: **Output**
T1 Mode: Updated with either FDL data (ESF) or Fs bits (D4) or Z bits (ZBTSI) one RCLK before the start of a frame.
E1 Mode: Updated with the full E1 data stream on the rising edge of RCLK.

Signal Name: **RLCLK**
Signal Description: **Receive Link Clock**
Signal Type: **Output**
T1 Mode: A 4kHz or 2kHz (ZBTSI) clock for the RLINK output.
E1 Mode: A 4kHz to 20kHz clock.

Signal Name: **RCLK**
Signal Description: **Receive Clock**
Signal Type: **Output**
1.544MHz (T1) or 2.048MHz (E1) clock that is used to clock data through the receive-side framer.

Signal Name: **RCHCLK**
Signal Description: **Receive Channel Clock**
Signal Type: **Output**
A 192kHz (T1) or 256kHz (E1) clock that pulses high during the LSB of each channel. Synchronous with RCLK when the receive-side elastic store is disabled. Synchronous with RSYSCLK when the receive-side elastic store is enabled. Useful for parallel-to-serial conversion of channel data.

Signal Name: **RCHBLK**
Signal Description: **Receive Channel Block**
Signal Type: **Output**
A user-programmable output that can be forced high or low during any of the 24 T1 or 32 E1 channels. Synchronous with RCLK when the receive-side elastic store is disabled. Synchronous with RSYSCLK when the receive-side elastic store is enabled. Useful for blocking clocks to a serial UART or LAPD controller in applications where not all channels are used such as fractional service, 384kbps service, 768kbps, or ISDN–PRI. Also useful for locating individual channels in drop-and-insert applications, for external per-channel loopback, and for per-channel conditioning. See Section 18 for details.

Signal Name: **RSER**
Signal Description: **Receive Serial Data**
Signal Type: **Output**
Received NRZ serial data. Updated on rising edges of RCLK when the receive-side elastic store is disabled. Updated on the rising edges of RSYSCLK when the receive-side elastic store is enabled.

Signal Name: **RSYNC**
Signal Description: **Receive Sync**
Signal Type: **Input/Output**
An extracted pulse, one RCLK wide, is output at this pin that identifies either frame (IOCR1.5 = 0) or multiframe (IOCR1.5 = 1) boundaries. If set to output frame boundaries, then through IOCR1.6, RSYNC can also be set to output double-wide pulses on signaling frames in T1 mode. If the receive-side elastic store is enabled, then this pin can be enabled to be an input through IOCR1.4, at which a frame or multiframe boundary pulse is applied.

Signal Name: **RFSYNC**
Signal Description: **Receive Frame Sync**
Signal Type: **Output**
An extracted 8kHz pulse, one RCLK wide, is output at this pin that identifies frame boundaries.

Signal Name: **RMSYNC**
Signal Description: **Receive Multiframe Sync**
Signal Type: **Output**
An extracted pulse, one RCLK wide (elastic store disabled) or one RSYSCLK wide (elastic store enabled), is output at this pin that identifies multiframe boundaries.

Signal Name: **RDATA**
Signal Description: **Receive Data**
Signal Type: **Output**
Updated on the rising edge of RCLK with the data out of the receive-side framer.

Signal Name: **RSYSCLK**
Signal Description: **Receive System Clock**
Signal Type: **Input**
1.544MHz, 2.048MHz, 4.096MHz, or 8.192MHz clock. Only used when the receive-side elastic store function is enabled. Should be connected low in applications that do not use the receive-side elastic store. See Section 28 for details on 4.096MHz and 8.192MHz operation using the IBO.

Signal Name: **RSIG**
Signal Description: **Receive Signaling Output**
Signal Type: **Output**
Outputs signaling bits in a PCM format. Updated on rising edges of RCLK when the receive-side elastic store is disabled. Updated on the rising edges of RSYSCLK when the receive-side elastic store is enabled.

Signal Name: **RLOS/LOTC**
Signal Description: **Receive Loss-of-Sync/Loss-of-Transmit Clock**
Signal Type: **Output**
A dual function output that is controlled by the CCR1.0 control bit. This pin can be programmed to either toggle high when the synchronizer is searching for the frame and multiframe or to toggle high if the TCLK pin has not been toggled for 5µs.

Signal Name: **RCL**
Signal Description: **Receive Carrier Loss**
Signal Type: **Output**
Set high when the line interface detects a carrier loss.

Signal Name: **RSIGF**
Signal Description: **Receive Signaling Freeze**
Signal Type: **Output**
Set high when the signaling data is frozen by either automatic or manual intervention. Used to alert downstream equipment of the condition.

Signal Name: **BPCLK**
Signal Description: **Backplane Clock**
Signal Type: **Output**
A user-selectable synthesized clock output that is referenced to the clock that is output at the RCLK pin.

Signal Name: **RPOSO**
Signal Description: **Receive Positive-Data Output**
Signal Type: **Output**
Updated on the rising edge of RCLKO with bipolar data out of the line interface. This pin is normally connected to RPOSI.

Signal Name: **RNEGO**
Signal Description: **Receive Negative-Data Output**
Signal Type: **Output**
Updated on the rising edge of RCLKO with the bipolar data out of the line interface. This pin is normally connected to RNEGI.

Signal Name: **RCLKO**
Signal Description: **Receive Clock Output**
Signal Type: **Output**
Buffered recovered clock from the network. This pin is normally connected to RCLKI.

Signal Name: **RPOSI**
Signal Description: **Receive Positive-Data Input**
Signal Type: **Input**
Sampled on the falling edge of RCLKI for data to be clocked through the receive-side framer. RPOSI and RNEGI can be connected together for an NRZ interface. Can be internally connected to RPOSO by connecting the LIUC pin high.

Signal Name: **RNEGI**
Signal Description: **Receive Negative-Data Input**
Signal Type: **Input**
Sampled on the falling edge of RCLKI for data to be clocked through the receive-side framer. RPOSI and RNEGI can be connected together for an NRZ interface. Can be internally connected to RNEGO by connecting the LIUC pin high.

Signal Name: **RCLKI**
Signal Description: **Receive Clock Input**
Signal Type: **Input**
Clock used to clock data through the receive-side framer. This pin is normally connected to RCLKO. Can be internally connected to RCLKO by connecting the LIUC pin high.

4.3 Parallel Control Port Pins

Signal Name: **$\overline{\text{INT}}$**
Signal Description: **Interrupt**
Signal Type: **Output**
Flags host controller during conditions and events defined in the status registers. Active-low, open-drain output.

Signal Name: **TSTRST**
Signal Description: **Tri-State Control and Device Reset**
Signal Type: **Input**
A dual function pin. A 0-to-1 transition issues a hardware reset to the DS2155 register set. A reset clears all configuration registers. Configuration register contents are set to 0. Leaving TSTRST high tri-states all output and I/O pins (including the parallel control port). Set low for normal operation. Useful in board-level testing.

Signal Name: **MUX**
Signal Description: **Bus Operation**
Signal Type: **Input**
Set low to select nonmultiplexed bus operation. Set high to select multiplexed bus operation.

Signal Name: **AD0 to AD7**
Signal Description: **Data Bus [D0 to D7] or Address/Data Bus**
Signal Type: **Input/Output**
In nonmultiplexed bus operation (MUX = 0), these serve as the data bus. In multiplexed bus operation (MUX = 1), these pins serve as an 8-bit multiplexed address/data bus.

Signal Name: **A0 to A6**
Signal Description: **Address Bus**
Signal Type: **Input**
In nonmultiplexed bus operation (MUX = 0), these serve as the address bus. In multiplexed bus operation (MUX = 1), these pins are not used and should be connected low.

Signal Name: **BTS**
Signal Description: **Bus Type Select**
Signal Type: **Input**
Strap high to select Motorola bus timing; strap low to select Intel bus timing. This pin controls the function of the $\overline{\text{RD}}$ ($\overline{\text{DS}}$), ALE (AS), and $\overline{\text{WR}}$ (R/$\overline{\text{W}}$) pins.
If BTS = 1, then these pins assume the function listed in parentheses ().

Signal Name: **$\overline{\text{RD}}$ ($\overline{\text{DS}}$)**
Signal Description: **Read Input, Data Strobe**
Signal Type: **Input**
In Intel mode, $\overline{\text{RD}}$ determines when data is read from the device. In Motorola mode, $\overline{\text{DS}}$ is used to write to the device. See *Bus Timing Diagrams*.

Signal Name: $\overline{CS}$
Signal Description: **Chip Select**
Signal Type: **Input**
Must be low to read or write to the device. $\overline{CS}$ is an active-low signal.

Signal Name: **ALE(AS)/A7**
Signal Description: **Address Latch Enable (Address Strobe) or A7**
Signal Type: **Input**
In nonmultiplexed bus operation (MUX = 0), serves as the upper address bit. In multiplexed bus operation (MUX = 1), serves to demultiplex the bus on a positive-going edge.

Signal Name: $\overline{WR}$ **(R/$\overline{W}$)**
Signal Description: **Write Input(Read/Write)**
Signal Type: **Input**
$\overline{WR}$ is an active-low signal.

4.4 Extended System Information Bus

Signal Name: **ESIBS0**
Signal Description: **Extended System Information Bus Select 0**
Signal Type: **Input/Output**
Used to group two to eight DS2155s into a bus-sharing mode for alarm and status reporting. See Section 29 for more details.

Signal Name: **ESIBS1**
Signal Description: **Extended System Information Bus Select 1**
Signal Type: **Input/Output**
Used to group two to eight DS2155s into a bus-sharing mode for alarm and status reporting. See Section 29 for more details.

Signal Name: **ESIBRD**
Signal Description: **Extended System Information Bus Read**
Signal Type: **Input/Output**
Used to group two to eight DS2155s into a bus-sharing mode for alarm and status reporting. See Section 29 for more details.

4.5 User Output Port Pins

Signal Name: **UOP0**
Signal Description: **User Output Port 0**
Signal Type: **Output**
This output port pin can be set low or high by the CCR4.0 control bit. This pin is forced low on power-up and after any device reset.

Signal Name: **UOP1**
Signal Description: **User Output Port 1**
Signal Type: **Output**
This output port pin can be set low or high by the CCR4.1 control bit. This pin is forced low on power-up and after any device reset.

Signal Name: **UOP2**
Signal Description: **User Output Port 2**
Signal Type: **Output**
This output port pin can be set low or high by the CCR4.2 control bit. This pin is forced low on power-up and after any device reset.

Signal Name: **UOP3**
Signal Description: **User Output Port 3**
Signal Type: **Output**
This output port pin can be set low or high by the CCR4.3 control bit. This pin is forced low on power-up and after any device reset.

4.6 JTAG Test Access Port Pins

Signal Name: **JTRST**
Signal Description: **IEEE 1149.1 Test Reset**
Signal Type: **Input**

JTRST is used to asynchronously reset the test access port controller. After power-up, JTRST must be toggled from low to high. This action sets the device into the JTAG DEVICE ID mode. Normal device operation is restored by pulling JTRST low. JTRST is pulled high internally by a 10kΩ resistor operation.

Signal Name: **JTMS**
Signal Description: **IEEE 1149.1 Test Mode Select**
Signal Type: **Input**
This pin is sampled on the rising edge of JTCLK and is used to place the test access port into the various defined IEEE 1149.1 states. This pin has a 10kΩ pullup resistor.

Signal Name: **JTCLK**
Signal Description: **IEEE 1149.1 Test Clock Signal**
Signal Type: **Input**
This signal is used to shift data into JTDI on the rising edge and out of JTDO on the falling edge.

Signal Name: **JTDI**
Signal Description: **IEEE 1149.1 Test Data Input**
Signal Type: **Input**
Test instructions and data are clocked into this pin on the rising edge of JTCLK. This pin has a 10kΩ pullup resistor.

Signal Name: **JTDO**
Signal Description: **IEEE 1149.1 Test Data Output**
Signal Type: **Output**
Test instructions and data are clocked out of this pin on the falling edge of JTCLK. If not used, this pin should be left unconnected.

4.7 Line Interface Pins

Signal Name: **MCLK**
Signal Description: **Master Clock Input**
Signal Type: **Input**
A (50ppm) clock source is applied at this pin. This clock is used internally for both clock/data recovery and for the jitter attenuator for T1 and E1 modes. A quartz crystal of 2.048MHz can be applied across MCLK and XTALD instead of the clock source. The clock rate can be 16.384MHz, 8.192MHz, 4.096MHz, or 2.048MHz. When using the DS2155 in T1-only operation, a 1.544MHz (50ppm) clock source can be used.

Signal Name: **XTALD**
Signal Description: **Quartz Crystal Driver**
Signal Type: **Output**
A quartz crystal of 2.048MHz (optional 1.544MHz in T1-only operation) can be applied across MCLK and XTALD instead of a clock source at MCLK. Leave open circuited if a clock source is applied at MCLK.

Signal Name: **8XCLK**
Signal Description: **Eight Times Clock (8x)**
Signal Type: **Output**
An 8x clock that is locked to the recovered network clock provided from the clock/data recovery block (if the jitter attenuator is enabled on the receive side) or from the TCLKI pin (if the jitter attenuator is enabled on the transmit side).

Signal Name: **LIUC**
Signal Description: **Line Interface Connect**
Signal Type: **Input**
Connect low to separate the line interface circuitry from the framer/formatter circuitry and activate the TPOSI/TNEGI/TCLKI/RPOSI/RNEGI/RCLKI pins. Connect high to connect the line interface circuitry to the framer/formatter circuitry and deactivate the TPOSI/TNEGI/TCLKI/RPOSI/RNEGI/RCLKI pins. When LIUC is connected high, the TPOSI/TNEGI/TCLKI/RPOSI/RNEGI/RCLKI pins should be connected low.

Signal Name: **RTIP and RRING**
Signal Description: **Receive Tip and Ring**
Signal Type: **Input**
Analog inputs for clock recovery circuitry. These pins connect through a 1:1 transformer to the network. See Section 24 for details.

Signal Name: **TTIP and TRING**
Signal Description: **Transmit Tip and Ring**
Signal Type: **Output**
Analog line driver outputs. These pins connect through a 1:2 step-up transformer to the network. See Section 24 for details.

4.8 Supply Pins

Signal Name: **DVDD**
Signal Description: **Digital Positive Supply**
Signal Type: **Supply**
3.3V ±5%. Should be connected to the RVDD and TVDD pins.

Signal Name: **RVDD**
Signal Description: **Receive Analog Positive Supply**
Signal Type: **Supply**
3.3V ±5%. Should be connected to the DVDD and TVDD pins.

Signal Name: **TVDD**
Signal Description: **Transmit Analog Positive Supply**
Signal Type: **Supply**
3.3V ±5%. Should be connected to the RVDD and DVDD pins.

Signal Name: **DVSS**
Signal Description: **Digital Signal Ground**
Signal Type: **Supply**
Should be connected to the RVSS and TVSS pins.

Signal Name: **RVSS**
Signal Description: **Receive Analog Signal Ground**
Signal Type: **Supply**
0V. Should be connected to DVSS and TVSS.

Signal Name: **TVSS**
Signal Description: **Transmit Analog Signal Ground**
Signal Type: **Supply**
0V. Should be connected to DVSS and RVSS.

4.9 L and G Package Pinout

The DS2155 is available in either a 100-pin LQFP (L) or 10mm CSBGA, 0.8mm pitch (G) package.

Table 4-A. Pin Description Sorted by Pin Number

PIN		SYMBOL	TYPE	FUNCTION
LQFP	CSBGA			
1	A1	RCHBLK	O	Receive Channel Block
2	B2	JTMS	I	IEEE 1149.1 Test Mode Select
3	C3	BPCLK	O	Backplane Clock
4	B1	JTCLK	I	IEEE 1149.1 Test Clock Signal
5	D4	JTRST	I	IEEE 1149.1 Test Reset
6	C2	RCL	O	Receive Carrier Loss
7	C1	JTDI	I	IEEE 1149.1 Test Data Input
8	D3	UOP0	O	User Output 0
9	D2	UOP1	O	User Output 1
10	D1	JTDO	O	IEEE 1149.1 Test Data Output
11	E3	BTS	I	Bus Type Select
12	E2	LIUC	I	Line Interface Connect
13	E1	8XCLK	O	Eight Times Clock
14	E4	TSTRST	I	Test/Reset
15	E5	UOP2	O	User Output 2
16	F1	RTIP	I	Receive Analog Tip Input
17	F2	RRING	I	Receive Analog Ring Input
18	F3	RVDD	—	Receive Analog Positive Supply
19, 20, 24	F4, G1, J1	RVSS	—	Receive Analog Signal Ground
21	G2	MCLK	I	Master Clock Input
22	H1	XTALD	O	Quartz Crystal Driver
23	G3	UOP3	O	User Output 3
25	H2	$\overline{\text{INT}}$	O	Interrupt
26	K1	N.C.	—	Reserved for Factory Test
27, 28	J2, H3	N.C.	—	Reserved for Factory Test
29	K2	TTIP	O	Transmit Analog Tip Output
30	G4	TVSS	–	Transmit Analog Signal Ground
31	J3	TVDD	–	Transmit Analog Positive Supply
32	K3	TRING	O	Transmit Analog Ring Output
33	H4	TCHBLK	O	Transmit Channel Block
34	J4	TLCLK	O	Transmit Link Clock
35	K4	TLINK	I	Transmit Link Data
36	H5	ESIBS0	I/O	Extended System Information Bus 0
37	J5	TSYNC	I/O	Transmit Sync
38	K5	TPOSI	I	Transmit Positive-Data Input
39	G5	TNEGI	I	Transmit Negative-Data Input
40	F5	TCLKI	I	Transmit Clock Input
41	K6	TCLKO	O	Transmit Clock Output
42	J6	TNEGO	O	Transmit Negative-Data Output
43	H6	TPOSO	O	Transmit Positive-Data Output
44, 61, 81, 83	K7, F8, B8, C7	DVDD	—	Digital Positive Supply
45, 60, 80, 84	G6, G10, D7, B7	DVSS	—	Digital Signal Ground
46	J7	TCLK	I	Transmit Clock
47	K8	TSER	I	Transmit Serial Data
48	H7	TSIG	I	Transmit Signaling Input
49	K9	TESO	O	Transmit Elastic Store Output
50	J8	TDATA	I	Transmit Data

PIN		SYMBOL	TYPE	FUNCTION
LQFP	CSBGA			
51	K10	TSYSCLK	I	Transmit System Clock
52	J9	TSSYNC	I	Transmit System Sync
53	H8	TCHCLK	O	Transmit Channel Clock
54	J10	ESIBS1	I/O	Extended System Information Bus 1
55	G7	MUX	I	Bus Operation
56	H9	D0/AD0	I/O	Data Bus Bit0/Address/Data Bus Bit 0
57	H10	D1/AD1	I/O	Data Bus Bit1/Address/Data Bus Bit 1
58	G8	D2/AD2	I/O	Data Bus Bit 2/Address/Data Bus 2
59	G9	D3/AD3	I/O	Data Bus Bit 3/Address/Data Bus Bit 3
62	F9	D4/AD4	I/O	Data Bus Bit4/Address/Data Bus Bit 4
63	F10	D5/AD5	I/O	Data Bus Bit 5/Address/Data Bus Bit 5
64	F7	D6/AD6	I/O	Data Bus Bit 6/Address/Data Bus Bit 6
65	F6	D7/AD7	I/O	Data Bus Bit 7/Address/Data Bus Bit 7
66	E10	A0	I	Address Bus Bit 0
67	E9	A1	I	Address Bus Bit 1
68	E8	A2	I	Address Bus Bit 2
69	D10	A3	I	Address Bus Bit 3
70	E7	A4	I	Address Bus Bit 4
71	D9	A5	I	Address Bus Bit 5
72	C10	A6	I	Address Bus Bit 6
73	D8	ALE (AS)/A7	I	Address Latch Enable/Address Bus Bit 7
74	B10	$\overline{RD}$ ($\overline{DS}$)	I	Read Input (Data Strobe)
75	C9	$\overline{CS}$	I	Chip Select
76	A10	ESIBRD	I/O	Extended System Information Bus Read
77	B9	$\overline{WR}$ (R/$\overline{W}$)	I	Write Input (Read/Write)
78	C8	RLINK	O	Receive Link Data
79	A9	RLCLK	O	Receive Link Clock
82	A8	RCLK	O	Receive Clock
85	A7	RDATA	O	Receive Data
86	C6	RPOSI	I	Receive Positive-Data Input
87	B6	RNEGI	I	Receive Negative-Data Input
88	A6	RCLKI	I	Receive Clock Input
89	D6	RCLKO	O	Receive Clock Output
90	E6	RNEGO	O	Receive Negative-Data Output
91	A5	RPOSO	O	Receive Positive-Data Output
92	B5	RCHCLK	O	Receive Channel Clock
93	C5	RSIGF	O	Receive Signaling-Freeze Output
94	A4	RSIG	O	Receive Signaling Output
95	D5	RSER	O	Receive Serial Data
96	B4	RMSYNC	O	Receive Multiframe Sync
97	A3	RFSYNC	O	Receive Frame Sync
98	C4	RSYNC	I/O	Receive Sync
99	A2	RLOS/LOTC	O	Receive Loss-of-Sync/Loss-of-Transmit Clock
100	B3	RSYSCLK	I	Receive System Clock

4.10 10mm CSBGA Pin Configuration

Figure 4-1. 10mm CSBGA Pin Configuration

	1	2	3	4	5	6	7	8	9	10
A	RCHBLK	RLOS/ LOTC	RFSYNC	RSIG	RPOSO	RCLKI	RDATA	RCLK	RLCLK	ESIBRD
B	JTCLK	JTMS	RSYSCLK	RMSYNC	RCHCLK	RNEGI	DVSS	DVDD	$\overline{WR}$ (R/$\overline{W}$)	$\overline{RD}$ ($\overline{DS}$)
C	JTDI	RCL	BPCLK	RSYNC	RSIGF	RPOSI	DVDD	RLINK	$\overline{CS}$	A6
D	JTDO	UOP1	UOP0	JTRST	RSER	RCLKO	DVSS	ALE(AS)/ A7	A5	A3
E	8XCLK	LIUC	BTS	TSTRST	UOP2	RNEGO	A4	A2	A1	A0
F	RTIP	RRING	RVDD	RVSS	TCLKI	D7/AD7	D6/AD6	DVDD	D4/AD4	D5/AD5
G	RVSS	MCLK	UOP3	TVSS	TNEGI	DVSS	MUX	D2/AD2	D3/AD3	DVSS
H	XTALD	$\overline{INT}$	N.C.	TCHBLK	ESIBS0	TPOSO	TSIG	TCHCLK	D0/AD0	D1/AD1
J	RVSS	N.C.	TVDD	TLCLK	TSYNC	TNEGO	TCLK	TDATA	TSSYNC	ESIBS1
K	TUSEL	TTIP	TRING	TLINK	TPOSI	TCLKO	DVDD	TSER	TESO	TSYSCLK

TOP VIEW

5. PARALLEL PORT

The SCT is controlled by either a nonmultiplexed (MUX = 0) or a multiplexed (MUX = 1) bus through an external microcontroller or microprocessor. The SCT can operate with either Intel or Motorola bus timing configurations. If the BTS pin is connected low, Intel timing is selected; if connected high, Motorola timing is selected. All Motorola bus signals are listed in parentheses (). See the timing diagrams in *AC Electrical Characteristics* in Section 37 for more details.

5.1 Register Map

Table 5-A. Register Map Sorted by Address

ADDRESS xxh	R/W	REGISTER NAME	SYMBOL	PAGE
00	R/W	Master Mode Register	MSTRREG	40
01	R/W	I/O Configuration Register 1	IOCR1	69
02	R/W	I/O Configuration Register 2	IOCR2	70
03	R/W	T1 Receive Control Register 1	T1RCR1	46
04	R/W	T1 Receive Control Register 2	T1RCR2	47
05	R/W	T1 Transmit Control Register 1	T1TCR1	48
06	R/W	T1 Transmit Control Register 2	T1TCR2	49
07	R/W	T1 Common Control Register 1	T1CCR1	50
08	R/W	Software Signaling Insertion Enable 1	SSIE1	93
09	R/W	Software Signaling Insertion Enable 2	SSIE2	93
0A	R/W	Software Signaling Insertion Enable 3	SSIE3	94
0B	R/W	Software Signaling Insertion Enable 4	SSIE4	94
0C	R/W	T1 Receive Digital Milliwatt Enable Register 1	T1RDMR1	52
0D	R/W	T1 Receive Digital Milliwatt Enable Register 2	T1RDMR2	52
0E	R/W	T1 Receive Digital Milliwatt Enable Register 3	T1RDMR3	52
0F	R	Device Identification Register	IDR	63
10	R/W	Information Register 1	INFO1	53
11	R	Information Register 2	INFO2	153
12	R/W	Information Register 3	INFO3	60
13	—	Unused	—	—
14	R	Interrupt Information Register 1	IIR1	42
15	R	Interrupt Information Register 2	IIR2	42
16	R/W	Status Register 1	SR1	154
17	R/W	Interrupt Mask Register 1	IMR1	155
18	R/W	Status Register 2	SR2	63
19	R/W	Interrupt Mask Register 2	IMR2	64
1A	R/W	Status Register 3	SR3	65
1B	R/W	Interrupt Mask Register 3	IMR3	66
1C	R/W	Status Register 4	SR4	67
1D	R/W	Interrupt Mask Register 4	IMR4	68
1E	R/W	Status Register 5	SR5	106
1F	R/W	Interrupt Mask Register 5	IMR5	106
20	R/W	Status Register 6	SR6	135
21	R/W	Interrupt Mask Register 6	IMR6	136
22	R/W	Status Register 7	SR7	135
23	R/W	Interrupt Mask Register 7	IMR7	136
24	R/W	Status Register 8	SR8	112

ADDRESS xxh	R/W	REGISTER NAME	SYMBOL	PAGE
25	R/W	Interrupt Mask Register 8	IMR8	112
26	R/W	Status Register 9	SR9	174
27	R/W	Interrupt Mask Register 9	IMR9	175
28	R/W	Per-Channel Pointer Register	PCPR	43
29	W	Per-Channel Data Register 1	PCDR1	44
2A	W	Per-Channel Data Register 2	PCDR2	44
2B	W	Per-Channel Data Register 3	PCDR3	44
2C	W	Per-Channel Data Register 4	PCDR4	44
2D	R/W	Information Register 4	INFO4	137
2E	R	Information Register 5	INFO5	137
2F	R	Information Register 6	INFO6	137
30	R	Information Register 7	INFO7	60
31	R/W	HDLC #1 Receive Control	H1RC	129
32	R/W	HDLC #2 Receive Control	H2RC	129
33	R/W	E1 Receive Control Register 1	E1RCR1	55
34	R/W	E1 Receive Control Register 2	E1RCR2	56
35	R/W	E1 Transmit Control Register 1	E1TCR1	57
36	R/W	E1 Transmit Control Register 2	E1TCR2	58
37	R/W	BOC Control Register	BOCC	111
38	R/W	Receive Signaling Change-of-State Information 1	RSINFO1	88
39	R/W	Receive Signaling Change-of-State Information 2	RSINFO2	88
3A	R/W	Receive Signaling Change-of-State Information 3	RSINFO3	88
3B	R/W	Receive Signaling Change-of-State Information 4	RSINFO4	88
3C	R/W	Receive Signaling Change-of-State Interrupt Enable 1	RSCSE1	88
3D	R/W	Receive Signaling Change-of-State Interrupt Enable 2	RSCSE2	88
3E	R/W	Receive Signaling Change-of-State Interrupt Enable 3	RSCSE3	88
3F	R/W	Receive Signaling Change-of-State Interrupt Enable 4	RSCSE4	88
40	R/W	Signaling Control Register	SIGCR	85
41	R/W	Error Count Configuration Register	ERCNT	75
42	R	Line Code Violation Count Register 1	LCVCR1	77
43	R	Line Code Violation Count Register 2	LCVCR2	77
44	R	Path Code Violation Count Register 1	PCVCR1	78
45	R	Path Code Violation Count Register 2	PCVCR2	78
46	R	Frames Out-of-Sync Count Register 1	FOSCR1	79
47	R	Frames Out-of-Sync Count Register 2	FOSCR2	79
48	R	E-Bit Count Register 1	EBCR1	80
49	R	E-Bit Count Register 2	EBCR2	80
4A	R/W	Loopback Control Register	LBCR	71
4B	R/W	Per-Channel Loopback Enable Register 1	PCLR1	73
4C	R/W	Per-Channel Loopback Enable Register 2	PCLR2	73
4D	R/W	Per-Channel Loopback Enable Register 3	PCLR3	74
4E	R/W	Per-Channel Loopback Enable Register 4	PCLR4	74
4F	R/W	Elastic Store Control Register	ESCR	105
50	R/W	Transmit Signaling Register 1	TS1	91
51	R/W	Transmit Signaling Register 2	TS2	91
52	R/W	Transmit Signaling Register 3	TS3	91
53	R/W	Transmit Signaling Register 4	TS4	91

ADDRESS xxh	R/W	REGISTER NAME	SYMBOL	PAGE
54	R/W	Transmit Signaling Register 5	TS5	91
55	R/W	Transmit Signaling Register 6	TS6	91
56	R/W	Transmit Signaling Register 7	TS7	91
57	R/W	Transmit Signaling Register 8	TS8	91
58	R/W	Transmit Signaling Register 9	TS9	91
59	R/W	Transmit Signaling Register 10	TS10	91
5A	R/W	Transmit Signaling Register 11	TS11	91
5B	R/W	Transmit Signaling Register 12	TS12	91
5C	R/W	Transmit Signaling Register 13	TS13	91
5D	R/W	Transmit Signaling Register 14	TS14	91
5E	R/W	Transmit Signaling Register 15	TS15	91
5F	R/W	Transmit Signaling Register 16	TS16	91
60	R	Receive Signaling Register 1	RS1	86
61	R	Receive Signaling Register 2	RS2	86
62	R	Receive Signaling Register 3	RS3	86
63	R	Receive Signaling Register 4	RS4	86
64	R	Receive Signaling Register 5	RS5	86
65	R	Receive Signaling Register 6	RS6	86
66	R	Receive Signaling Register 7	RS7	86
67	R	Receive Signaling Register 8	RS8	86
68	R	Receive Signaling Register 9	RS9	86
69	R	Receive Signaling Register 10	RS10	86
6A	R	Receive Signaling Register 11	RS11	86
6B	R	Receive Signaling Register 12	RS12	86
6C	R	Receive Signaling Register 13	RS13	86
6D	R	Receive Signaling Register 14	RS14	86
6E	R	Receive Signaling Register 15	RS15	86
6F	R	Receive Signaling Register 16	RS16	86
70	R/W	Common Control Register 1	CCR1	62
71	R/W	Common Control Register 2	CCR2	191
72	R/W	Common Control Register 3	CCR3	192
73	R/W	Common Control Register 4	CCR4	149
74	R/W	Transmit Channel Monitor Select	TDS0SEL	81
75	R	Transmit DS0 Monitor Register	TDS0M	81
76	R/W	Receive Channel Monitor Select	RDS0SEL	82
77	R	Receive DS0 Monitor Register	RDS0M	82
78	R/W	Line Interface Control 1	LIC1	147
79	R/W	Line Interface Control 2	LIC2	150
7A	R/W	Line Interface Control 3	LIC3	151
7B	R/W	Line Interface Control 4	LIC4	152
7C	—	Unused	—	—
7D	R/W	Transmit Line Build-Out Control	TLBC	149
7E	W	Idle Array Address Register	IAAR	98
7F	R/W	Per-Channel Idle Code Value Register	PCICR	98
80	R/W	Transmit Idle Code Enable Register 1	TCICE1	99
81	R/W	Transmit Idle Code Enable Register 2	TCICE2	99
82	R/W	Transmit Idle Code Enable Register 3	TCICE3	99

ADDRESS xxh	R/W	REGISTER NAME	SYMBOL	PAGE
83	R/W	Transmit Idle Code Enable Register 4	TCICE4	99
84	R/W	Receive Idle Code Enable Register 1	RCICE1	100
85	R/W	Receive Idle Code Enable Register 2	RCICE2	100
86	R/W	Receive Idle Code Enable Register 3	RCICE3	100
87	R/W	Receive Idle Code Enable Register 4	RCICE4	100
88	R/W	Receive Channel Blocking Register 1	RCBR1	101
89	R/W	Receive Channel Blocking Register 2	RCBR2	101
8A	R/W	Receive Channel Blocking Register 3	RCBR3	102
8B	R/W	Receive Channel Blocking Register 4	RCBR4	102
8C	R/W	Transmit Channel Blocking Register 1	TCBR1	103
8D	R/W	Transmit Channel Blocking Register 2	TCBR2	103
8E	R/W	Transmit Channel Blocking Register 3	TCBR3	103
8F	R/W	Transmit Channel Blocking Register 4	TCBR4	103
90	R/W	HDLC #1 Transmit Control	H1TC	128
91	R/W	HDLC #1 FIFO Control	H1FC	130
92	R/W	HDLC #1 Receive Channel Select 1	H1RCS1	131
93	R/W	HDLC #1 Receive Channel Select 2	H1RCS2	131
94	R/W	HDLC #1 Receive Channel Select 3	H1RCS3	131
95	R/W	HDLC #1 Receive Channel Select 4	H1RCS4	131
96	R/W	HDLC #1 Receive Time Slot Bits/Sa Bits Select	H1RTSBS	132
97	R/W	HDLC #1 Transmit Channel Select1	H1TCS1	133
98	R/W	HDLC #1 Transmit Channel Select2	H1TCS2	133
99	R/W	HDLC #1 Transmit Channel Select3	H1TCS3	133
9A	R/W	HDLC #1 Transmit Channel Select4	H1TCS4	133
9B	R/W	HDLC #1 Transmit Time Slot Bits/Sa Bits Select	H1TTSBS	134
9C	R	HDLC #1 Receive Packet Bytes Available	H1RPBA	138
9D	W	HDLC #1 Transmit FIFO	H1TF	139
9E	R	HDLC #1 Receive FIFO	H1RF	139
9F	R	HDLC #1 Transmit FIFO Buffer Available	H1TFBA	138
A0	R/W	HDLC #2 Transmit Control	H2TC	128
A1	R/W	HDLC #2 FIFO Control	H2FC	130
A2	R/W	HDLC #2 Receive Channel Select 1	H2RCS1	131
A3	R/W	HDLC #2 Receive Channel Select 2	H2RCS2	131
A4	R/W	HDLC #2 Receive Channel Select 3	H2RCS3	131
A5	R/W	HDLC #2 Receive Channel Select 4	H2RCS4	131
A6	R/W	HDLC #2 Receive Time Slot Bits/Sa Bits Select	H2RTSBS	132
A7	R/W	HDLC #2 Transmit Channel Select1	H2TCS1	133
A8	R/W	HDLC #2 Transmit Channel Select2	H2TCS2	133
A9	R/W	HDLC #2 Transmit Channel Select3	H2TCS3	133
AA	R/W	HDLC #2 Transmit Channel Select4	H2TCS4	133
AB	R/W	HDLC #2 Transmit Time Slot Bits/Sa Bits Select	H2TTSBS	134
AC	R	HDLC #2 Receive Packet Bytes Available	H2RPBA	138
AD	W	HDLC #2 Transmit FIFO	H2TF	139
AE	R	HDLC #2 Receive FIFO	H2RF	139
AF	R	HDLC #2 Transmit FIFO Buffer Available	H2TFBA	138
B0	R/W	Extend System Information Bus Control Register 1	ESIBCR1	188
B1	R/W	Extend System Information Bus Control Register 2	ESIBCR2	189

ADDRESS xxh	R/W	REGISTER NAME	SYMBOL	PAGE
B2	R	Extend System Information Bus Register 1	ESIB1	190
B3	R	Extend System Information Bus Register 2	ESIB2	190
B4	R	Extend System Information Bus Register 3	ESIB3	190
B5	R	Extend System Information Bus Register 4	ESIB4	190
B6	R/W	In-Band Code Control Register	IBCC	164
B7	R/W	Transmit Code Definition Register 1	TCD1	165
B8	R/W	Transmit Code Definition Register 2	TCD2	165
B9	R/W	Receive Up Code Definition Register 1	RUPCD1	166
BA	R/W	Receive Up Code Definition Register 2	RUPCD2	166
BB	R/W	Receive Down Code Definition Register 1	RDNCD1	167
BC	R/W	Receive Down Code Definition Register 2	RDNCD2	167
BD	R/W	In-Band Receive Spare Control Register	RSCC	168
BE	R/W	Receive Spare Code Definition Register 1	RSCD1	169
BF	R/W	Receive Spare Code Definition Register 2	RSCD2	169
C0	R	Receive FDL Register	RFDL	141
C1	R/W	Transmit FDL Register	TFDL	142
C2	R/W	Receive FDL Match Register 1	RFDLM1	141
C3	R/W	Receive FDL Match Register 2	RFDLM2	141
C4	—	Unused	—	—
C5	R/W	Interleave Bus Operation Control Register	IBOC	185
C6	R	Receive Align Frame Register	RAF	114
C7	R	Receive Nonalign Frame Register	RNAF	114
C8	R	Receive Si Align Frame	RSiAF	116
C9	R	Receive Si Nonalign Frame	RSiNAF	117
CA	R	Receive Remote Alarm Bits	RRA	117
CB	R	Receive Sa4 Bits	RSa4	118
CC	R	Receive Sa5 Bits	RSa5	118
CD	R	Receive Sa6 Bits	RSa6	119
CE	R	Receive Sa7 Bits	RSa7	119
CF	R	Receive Sa8 Bits	RSa8	120
D0	R/W	Transmit Align Frame Register	TAF	115
D1	R/W	Transmit Nonalign Frame Register	TNAF	115
D2	R/W	Transmit Si Align Frame	TSiAF	120
D3	R/W	Transmit Si Nonalign Frame	TSiNAF	121
D4	R/W	Transmit Remote Alarm Bits	TRA	121
D5	R/W	Transmit Sa4 Bits	TSa4	122
D6	R/W	Transmit Sa5 Bits	TSa5	122
D7	R/W	Transmit Sa6 Bits	TSa6	123
D8	R/W	Transmit Sa7 Bits	TSa7	123
D9	R/W	Transmit Sa8 Bits	TSa8	124
DA	R/W	Transmit Sa Bit Control Register	TSACR	125
DB	R/W	BERT Alternating Word Count Rate	BAWC	175
DC	R/W	BERT Repetitive Pattern Set Register 1	BRP1	176
DD	R/W	BERT Repetitive Pattern Set Register 2	BRP2	176
DE	R/W	BERT Repetitive Pattern Set Register 3	BRP3	176
DF	R/W	BERT Repetitive Pattern Set Register 4	BRP4	176
E0	R/W	BERT Control Register 1	BC1	172

ADDRESS xxh	R/W	REGISTER NAME	SYMBOL	PAGE
E1	R/W	BERT Control Register 2	BC2	173
E2	—	Unused	—	—
E3	R	BERT Bit Count Register 1	BBC1	177
E4	R	BERT Bit Count Register 2	BBC2	177
E5	R	BERT Bit Count Register 3	BBC3	177
E6	R	BERT Bit Count Register 4	BBC4	177
E7	R	BERT Error Count Register 1	BEC1	178
E8	R	BERT Error Count Register 2	BEC2	178
E9	R	BERT Error Count Register 3	BEC3	178
EA	R/W	BERT Interface Control Register	BIC	179
EB	R/W	Error Rate Control Register	ERC	181
EC	R/W	Number-of-Errors 1	NOE1	182
ED	R/W	Number-of-Errors 2	NOE2	182
EE	R	Number-of-Errors Left 1	NOEL1	183
EF	R	Number-of-Errors Left 2	NOEL2	183
F0*	—	Test Register	TEST	—
F1–F9*	—	Test Register	TEST	—
FA–FF*	—	Test Register	TEST	—

**TEST1 to TEST16 registers are used only by the factory.*

6. PROGRAMMING MODEL

The DS2155 register map is divided into three groups: T1 specific features, E1 specific features, and common features. The typical programming sequence begins with issuing a reset to the DS2155, selecting T1 or E1 operation in the master mode register, enabling T1 or E1 functions and enabling the common functions. The act of resetting the DS2155 automatically clears all configuration and status registers. Therefore, it is not necessary to load unused registers with 0s.

Figure 6-1. Programming Sequence

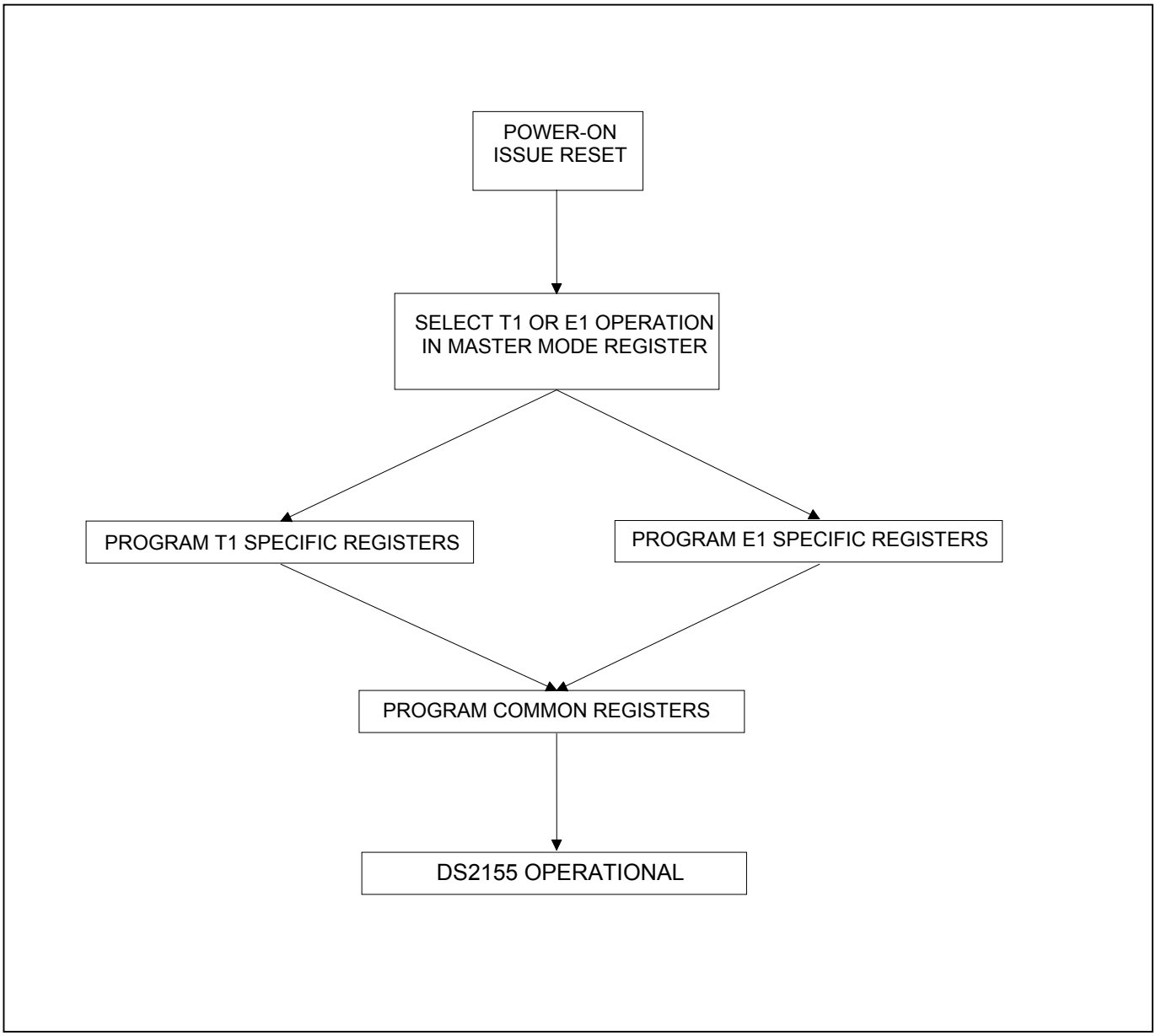

6.1 Power-Up Sequence

The DS2155 contains an on-chip power-up reset function that automatically clears the writeable register space immediately after power is supplied to the DS2155. The user can issue a chip reset at any time. Issuing a reset disrupts traffic flowing through the DS2155 until the device is reprogrammed. The reset can be issued through hardware using the TSTRST pin or through software using the SFTRST function in the master mode register. The LIRST (LIC2.6) should be toggled from 0 to 1 to reset the line interface circuitry. (It takes the DS2155 about 40ms to recover from the LIRST bit being toggled.) Finally, after the TSYSCLK and RSYSCLK inputs are stable, the receive and transmit elastic stores should be reset (this step can be skipped if the elastic stores are disabled).

6.1.1 Master Mode Register

Register Name: **MSTRREG**
Register Description: **Master Mode Register**
Register Address: **00h**

Bit #	7	6	5	4	3	2	1	0
Name	—	—	—	—	TEST1	TEST0	T1/E1	SFTRST
Default	0	0	0	0	0	0	0	0

Bit 0/Software-Issued Reset (SFTRST). A 0-to-1 transition causes the register space in the DS2155 to be cleared. A reset clears all configuration and status registers. The bit automatically clears itself when the reset has completed.

Bit 1/DS2155 Operating Mode (T1/E1). Used to select the operating mode of the framer/formatter (digital) portion of the 2156. The operating mode of the LIU must also be programmed.

0 = T1 operation
1 = E1 operation

Bits 2, 3/Test Mode Bits (TEST0, TEST1). Test modes are used to force the output pins of the DS2155 into known states. This can facilitate the checkout of assemblies during the manufacturing process and also be used to isolate devices from shared buses.

TEST1	TEST0	Effect On Output Pins
0	0	Operate normally
0	1	Force all output pins into tri-state (including all I/O pins and parallel port pins)
1	0	Force all output pins low (including all I/O pins except parallel port pins)
1	1	Force all output pins high (including all I/O pins except parallel port pins)

Bits 4 to 7/Unused, must be set to 0 for proper operation

6.2 Interrupt Handling

Various alarms, conditions, and events in the DS2155 can cause interrupts. For simplicity, these are all referred to as events in this explanation. All status registers can be programmed to produce interrupts. Each status register has an associated interrupt mask register. For example, SR1 (status register 1) has an interrupt control register called IMR1 (interrupt mask register 1). Status registers are the only sources of interrupts in the DS2155. On power-up, all writeable registers are automatically cleared. Since bits in the IMRx registers have to be set = 1 to allow a particular event to cause an interrupt, no interrupts can occur until the host selects which events are to product interrupts. Since there are potentially many sources of interrupts on the DS2155, several features are available to help sort out and identify which event is causing an interrupt. When an interrupt occurs, the host should first read the IIR1 and IIR2 registers (interrupt information registers) to identify which status register (or registers) is producing the interrupt. Once that is determined, the individual status register or registers can be examined to determine the exact source. In multiple port configurations, two to eight DS2155s can be connected together by the 3-wire ESIB feature. This allows multiple DS2155s to be interrogated by a single CPU port read cycle. The host can determine the synchronization status, or interrupt status of up to eight devices with a single read. The ESIB feature also allows the user to select from various events to be examined through this method. For more information, see Section 29.

Once an interrupt has occurred, the interrupt handler routine should set the INTDIS bit (CCR3.6) to stop further activity on the interrupt pin. After all interrupts have been determined and processed, the interrupt hander routine should re-enable interrupts by setting the INTDIS bit = 0.

6.3 Status Registers

When a particular event or condition has occurred (or is still occurring in the case of conditions), the appropriate bit in a status register is set to a 1. All of the status registers operate in a latched fashion. This means that if an event or condition occurs a bit is set to a 1. It remains set until the user reads that bit. An event bit is cleared when it is read and it is not set again until the event has occurred again. Condition bits such as RBL, RLOS, etc., remain set if the alarm is still present.

The user always proceeds a read of any of the status registers with a write. The byte written to the register informs the DS2155 which bits the user wishes to read and have cleared. The user writes a byte to one of these registers, with a 1 in the bit positions the user wishes to read and a 0 in the bit positions the user does not wish to obtain the latest information on. When a 1 is written to a bit location, the read register is updated with the latest information. When a 0 is written to a bit position, the read register is not updated and the previous value is held. A write to the status registers is immediately followed by a read of the same register. This write-read scheme allows an external microcontroller or microprocessor to individually poll certain bits without disturbing the other bits in the register. This operation is key in controlling the DS2155 with higher order languages.

Status register bits are divided into two groups, condition bits and event bits. Condition bits are typically network conditions such as loss-of-sync or all-ones detect. Event bits are typically markers such as the one-second timer, elastic store slip, etc. Each status register bit is labeled as a condition or event bit. Some of the status registers have bits for both the detection of a condition and the clearance of the condition. For example, SR2 has a bit that is set when the device goes into a loss-of-sync state (SR2.0, a condition bit) and a bit that is set (SR2.4, an event bit) when the loss-of-sync condition clears (goes in sync). Some of the status register bits (condition bits) do not have a separate bit for the “condition clear” event but rather the status bit can produce interrupts on both edges, setting and clearing. These bits are marked as double interrupt bits. An interrupt is produced when the condition occurs and when it clears.

6.4 Information Registers

Information registers operate the same as status registers except they cannot cause interrupts. They are all latched except for INFO7 and some of the bits in INFO5 and INFO6. INFO7 register is a read-only register. It reports the status of the E1 synchronizer in real time. INFO7 and some of the bits in INFO6 and INFO5 are not latched and it is not necessary to precede a read of these bits with a write.

6.5 Interrupt Information Registers

The interrupt information registers provide an indication of which status registers (SR1 through SR9) are generating an interrupt. When an interrupt occurs, the host can read IIR1 and IIR2 to quickly identify which of the nine status registers are causing the interrupt.

Register Name: **IIR1**
Register Description: **Interrupt Information Register 1**
Register Address: **14h**

Bit #	7	6	5	4	3	2	1	0
Name	SR8	SR7	SR6	SR5	SR4	SR3	SR2	SR1
Default	0	0	0	0	0	0	0	0

Register Name: **IIR2**
Register Description: **Interrupt Information Register 2**
Register Address: **15h**

Bit #	7	6	5	4	3	2	1	0
Name	—	—	—	—	—	—	U_RSR	SR9
Default	0	0	0	0	0	0	0	0

7. SPECIAL PER-CHANNEL REGISTER OPERATION

Some of the features described in the data sheet that operate on a per-channel basis use a special method for channel selection. There are five registers involved: per-channel pointer register (PCPR) and per-channel data registers 1–4 (PCDR1–4). The user selects which function or functions are to be applied on a per-channel basis by setting the appropriate bit(s) in the PCPR register. The user then writes to the PCDR registers to select the channels for that function. The following is an example of mapping the transmit and receive BERT function to channels 9–12, 20, and 21.

```
Write 11h to PCPR
Write 00h to PCDR1
Write 0fh to PCDR2
Write 18h to PCDR3
Write 00h to PCDR4
```

The user may write to the PCDR1-4 with muliple functions in the PCPR register selected, but can only read the values from the PCDR1-4 registers for a single function at a time. More information about how to use these per-channel features can be found in their respective sections in the data sheet.

Register Name: **PCPR**
Register Description: **Per-Channel Pointer Register**
Register Address: **28h**

Bit #	7	6	5	4	3	2	1	0
Name	RSAOICS	RSRCS	RFCS	BRCS	THSCS	PEICS	TFCS	BTCS
Default	0	0	0	0	0	0	0	0

Bit 0/Bert Transmit Channel Select (BTCS)

Bit 1/Transmit Fractional Channel Select (TFCS)

Bit 2/Payload Error Insert Channel Select (PEICS)

Bit 3/Transmit Hardware Signaling Channel Select (THSCS)

Bit 4/Bert Receive Channel Select (BRCS)

Bit 5/Receive Fractional Channel Select (RFCS)

Bit 6/Receive Signaling Reinsertion Channel Select (RSRCS)

Bit 7/Receive Signaling All-Ones Insertion Channel Select (RSAOICS)

Register Name: **PCDR1**
Register Description: **Per-Channel Data Register 1**
Register Address: **29h**

Bit #	7	6	5	4	3	2	1	0
Name	—	—	—	—	—	—	—	—
Default	CH8	CH7	CH6	CH5	CH4	CH3	CH2	CH1

Register Name: **PCDR2**
Register Description: **Per-Channel Data Register 2**
Register Address: **2Ah**

Bit #	7	6	5	4	3	2	1	0
Name	—	—	—	—	—	—	—	—
Default	CH16	CH15	CH14	CH13	CH12	CH11	CH10	CH9

Register Name: **PCDR3**
Register Description: **Per-Channel Data Register 3**
Register Address: **2Bh**

Bit #	7	6	5	4	3	2	1	0
Name	—	—	—	—	—	—	—	—
Default	CH24	CH23	CH22	CH21	CH20	CH19	CH18	CH17

Register Name: **PCDR4**
Register Description: **Per-Channel Data Register 4**
Register Address: **2Ch**

Bit #	7	6	5	4	3	2	1	0
Name	—	—	—	—	—	—	—	—
Default	CH32	CH31	CH30	CH29	CH28	CH27	CH26	CH25

8. CLOCK MAP

Figure 8-1 shows the clock map of the DS2155. The routing for the transmit and receive clocks are shown for the various loopback modes and jitter attenuator positions. Although there is only one jitter attenuator, which can be placed in the receive or transmit path, two are shown for simplification and clarity.

Figure 8-1. Clock Map

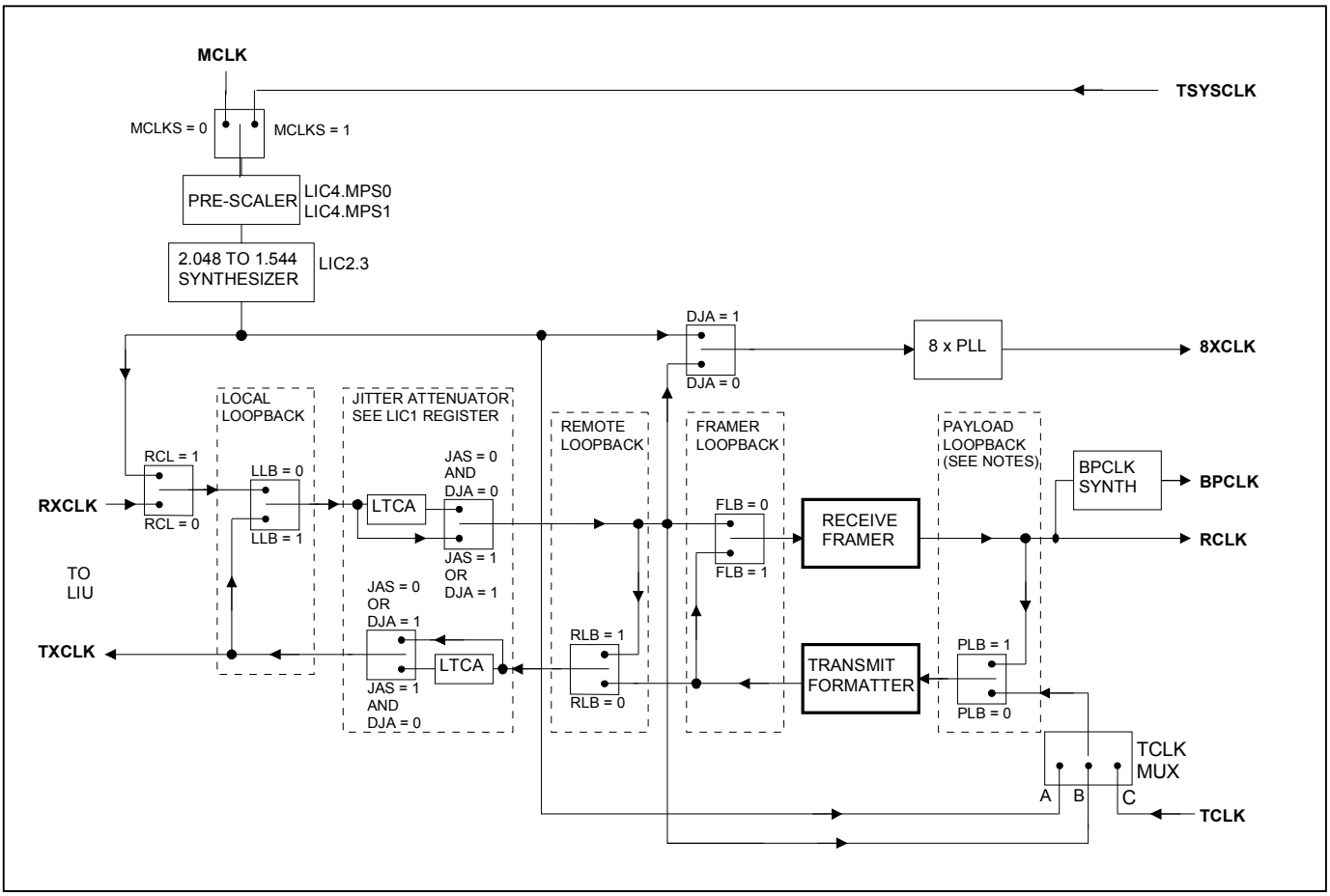

The TCLK MUX is dependent on the state of the TCSS0 and TCSS1 bits in the CCR1 register and the state of the TCLK pin.

TCSS1	TCSS0	Transmit Clock Source
0	0	The TCLK pin (C) is always the source of transmit clock.
0	1	Switch to the recovered clock (B) when the signal at the TCLK pin fails to transition after one channel time.
1	0	Use the scaled signal (A) derived from MCLK as the transmit clock. The TCLK pin is ignored.
1	1	Use the recovered clock (B) as the transmit clock. The TCLK pin is ignored.

9. T1 FRAMER/FORMATTER CONTROL AND STATUS REGISTERS

The T1 framer portion of the DS2155 is configured through a set of nine control registers. Typically, the control registers are only accessed when the system is first powered up. Once the DS2155 has been initialized, the control registers only need to be accessed when there is a change in the system configuration. There are two receive control registers (T1RCR1 and T1RCR2), two transmit control registers (T1TCR1 and T1TCR2), and a common control register (T1CCR1). Each of these registers is described in this section.

9.1 T1 Control Registers

Register Name: **T1RCR1**
Register Description: **T1 Receive Control Register 1**
Register Address: **03h**

Bit #	7	6	5	4	3	2	1	0
Name	—	ARC	OOF1	OOF2	SYNCC	SYNCT	SYNCE	RESYNC
Default	0	0	0	0	0	0	0	0

Bit 0/Resynchronize (RESYNC). When toggled from low to high, a resynchronization of the receive-side framer is initiated. Must be cleared and set again for a subsequent resync.

Bit 1/Sync Enable (SYNCE)
0 = auto resync enabled
1 = auto resync disabled

Bit 2/Sync Time (SYNCT)
0 = qualify 10 bits
1 = qualify 24 bits

Bit 3/Sync Criteria (SYNCC)
In D4 Framing Mode:
0 = search for Ft pattern, then search for Fs pattern
1 = cross couple Ft and Fs pattern
In ESF Framing Mode:
0 = search for FPS pattern only
1 = search for FPS and verify with CRC6

Bits 4, 5/Out-of-Frame Select Bits (OOF2, OOF1)

OOF2	OOF1	Out-Of-Frame Criteria
0	0	2/4 frame bits in error
0	1	2/5 frame bits in error
1	0	2/6 frame bits in error
1	1	2/6 frame bits in error

Bit 6/Auto Resync Criteria (ARC)
0 = resync on OOF or RCL event
1 = resync on OOF only

Bit 7/Unused, must be set to 0 for proper operation

Register Name: **T1RCR2**
Register Description: **T1 Receive Control Register 2**
Register Address: **04h**

Bit #	7	6	5	4	3	2	1	0
Name	—	RFM	RB8ZS	RSLC96	RZSE	RZBTSI	RJC	RD4YM
Default	0	0	0	0	0	0	0	0

Bit 0/Receive-Side D4 Yellow Alarm Select (RD4YM)
0 = 0s in bit 2 of all channels
1 = a 1 in the S-bit position of frame 12 (J1 Yellow Alarm Mode)

Bit 1/Receive Japanese CRC6 Enable (RJC)
0 = use ANSI/AT&T/ITU CRC6 calculation (normal operation)
1 = use Japanese standard JT–G704 CRC6 calculation

Bit 2/Receive-Side ZBTSI Support Enable (RZBTSI). Allows ZBTSI information to be output on RLINK pin.
0 = ZBTSI disabled
1 = ZBTSI enabled

Bit 3/Receive FDL Zero-Destuffer Enable (RZSE). Set this bit to 0 if using the internal HDLC/BOC controller instead of the legacy support for the FDL. See Section 23.5 for details.
0 = zero destuffer disabled
1 = zero destuffer enabled

Bit 4/Receive SLC-96 Enable (RSLC96). Only set this bit to a 1 in D4/SLC-96 framing applications. See Section 23.6 for details.
0 = SLC-96 disabled
1 = SLC-96 enabled

Bit 5/Receive B8ZS Enable (RB8ZS)
0 = B8ZS disabled
1 = B8ZS enabled

Bit 6/Receive Frame Mode Select (RFM)
0 = D4 framing mode
1 = ESF framing mode

Bit 7/Unused, must be set to 0 for proper operation

Register Name: **T1TCR1**
Register Description: **T1 Transmit Control Register 1**
Register Address: **05h**

Bit #	7	6	5	4	3	2	1	0
Name	TJC	TFPT	TCPT	TSSE	GB7S	TFDLS	TBL	TYEL
Default	0	0	0	0	0	0	0	0

Bit 0/Transmit Yellow Alarm (TYEL)
0 = do not transmit yellow alarm
1 = transmit yellow alarm

Bit 1/Transmit Blue Alarm (TBL)
0 = transmit data normally
1 = transmit an unframed all-ones code at TPOS and TNEG

Bit 2/TFDL Register Select (TFDLS)
0 = source FDL or Fs-bits from the internal TFDL register (legacy FDL support mode)
1 = source FDL or Fs-bits from the internal HDLC controller or the TLINK pin

Bit 3/Global Bit 7 Stuffing (GB7S)
0 = allow the SSIEx registers to determine which channels containing all 0s are to be bit 7 stuffed
1 = force bit 7 stuffing in all 0-byte channels regardless of how the SSIEx registers are programmed

Bit 4/Transmit Software Signaling Enable (TSSE).
0 = do not source signaling data from the TSx registers regardless of the SSIEx registers. The SSIEx registers still define which channels are to have B7 stuffing preformed.
1 = source signaling data as enabled by the SSIEx registers

Bit 5/Transmit CRC Pass-Through (TCPT)
0 = source CRC6 bits internally
1 = CRC6 bits sampled at TSER during F-bit time

Bit 6/Transmit F-Bit Pass-Through (TFPT)
0 = F bits sourced internally
1 = F bits sampled at TSER

Bit 7/Transmit Japanese CRC6 Enable (TJC)
0 = use ANSI/AT&T/ITU CRC6 calculation (normal operation)
1 = use Japanese standard JT–G704 CRC6 calculation

Register Name: **T1TCR2**
Register Description: **T1 Transmit Control Register 2**
Register Address: **06h**

Bit #	7	6	5	4	3	2	1	0
Name	TB8ZS	TSLC96	TZSE	FBCT2	FBCT1	TD4YM	TZBTSI	TB7ZS
Default	0	0	0	0	0	0	0	0

Bit 0/Transmit-Side Bit 7 Zero-Suppression Enable (TB7ZS)
0 = no stuffing occurs
1 = bit 7 forced to a 1 in channels with all 0s

Bit 1/Transmit-Side ZBTSI Support Enable (TZBTSI). Allows ZBTSI information to be input on TLINK pin.
0 = ZBTSI disabled
1 = ZBTSI enabled

Bit 2/Transmit-Side D4 Yellow Alarm Select (TD4YM)
0 = 0s in bit 2 of all channels
1 = a 1 in the S-bit position of frame 12

Bit 3/F-Bit Corruption Type 1 (FBCT1). A low-to-high transition of this bit causes the next three consecutive Ft (D4 framing mode) or FPS (ESF framing mode) bits to be corrupted causing the remote end to experience a loss of synchronization.

Bit 4/F-Bit Corruption Type 2 (FBCT2). Setting this bit high enables the corruption of one Ft (D4 framing mode) or FPS (ESF framing mode) bit in every 128 Ft or FPS bits as long as the bit remains set.

Bit 5/Transmit FDL Zero-Stuffer Enable (TZSE). Set this bit to 0 if using the internal HDLC controller instead of the legacy support for the FDL. See Section 15 for details.
0 = zero stuffer disabled
1 = zero stuffer enabled

Bit 6/Transmit SLC-96/Fs-Bit Insertion Enable (TSLC96). Only set this bit to a 1 in D4 framing applications. Must be set to 1 to source the Fs pattern from the TFDL register. See Section 23.6 for details.
0 = SLC-96/Fs-bit insertion disabled
1 = SLC-96/Fs-bit insertion enabled

Bit 7/Transmit B8ZS Enable (TB8ZS)
0 = B8ZS disabled
1 = B8ZS enabled

Register Name: **T1CCR1**
Register Description: **T1 Common Control Register 1**
Register Address: **07h**

Bit #	7	6	5	4	3	2	1	0
Name	—	—	—	TRAI-CI	TAIS-CI	TFM	PDE	TLOOP
Default	0	0	0	0	0	0	0	0

Bit 0/Transmit Loop-Code Enable (TLOOP). See Section 25 for details.

0 = transmit data normally
1 = replace normal transmitted data with repeating code as defined in registers TCD1 and TCD2

Bit 1/Pulse Density Enforcer Enable (PDE). The framer always examines the transmit and receive data streams for violations of these, which are required by ANSI T1.403: No more than 15 consecutive 0s and at least N 1s in each and every time window of 8 x (N + 1) bits, where N = 1 through 23. Violations for the transmit and receive data streams are reported in the INFO1.6 and INFO1.7 bits, respectively. When this bit is set to 1, the DS2155 forces the transmitted stream to meet this requirement no matter the content of the transmitted stream. When running B8ZS, this bit should be set to 0 since B8ZS encoded data streams cannot violate the pulse density requirements.

0 = disable transmit pulse density enforcer
1 = enable transmit pulse density enforcer

Bit 2/Transmit Frame Mode Select (TFM)

0 = D4 framing mode
1 = ESF framing mode

Bit 3/Transmit AIS-CI Enable (TAIS-CI). Setting this bit and the TBL bit (T1TCR1.1) causes the AIS-CI code to be transmitted at TPOSO and TNEGO, as defined in ANSI T1.403.

0 = do not transmit the AIS-CI code
1 = transmit the AIS-CI code (T1TCR1.1 must also be set = 1)

Bit 4/Transmit RAI-CI Enable (TRAI-CI). Setting this bit causes the ESF RAI-CI code to be transmitted in the FDL bit position.

0 = do not transmit the ESF RAI-CI code
1 = transmit the ESF RAI-CI code

Bits 5 to 7/Unused, must be set to 0 for proper operation

9.2 T1 Transmit Transparency

The software signaling insertion-enable registers, SSIE1–SSIE4, can be used to select signaling insertion from the transmit signaling registers, TS1–TS12, on a per-channel basis. Setting a bit in the SSIEx register allows signaling data to be sourced from the signaling registers for that channel.

In transparent mode, bit 7 stuffing and/or robbed-bit signaling is prevented from overwriting the data in the channels. If a DS0 is programmed to be clear, no robbed-bit signaling is inserted nor does the channel have bit 7 stuffing performed. However, in the D4 framing mode, bit 2 is overwritten by a 0 when a Yellow Alarm is transmitted. Also, the user has the option to globally override the SSIEx registers from determining which channels are to have bit 7 stuffing performed. If the T1TCR1.3 and T1TCR2.0 bits are set to 1, then all 24 T1 channels have bit 7 stuffing performed on them, regardless of how the SSIEx registers are programmed. In this manner, the SSIEx registers are only affecting the channels that are to have robbed-bit signaling inserted into them.

9.3 AIS-CI and RAI-CI Generation and Detection

The DS2155 can transmit and detect the RAI-CI and AIS-CI codes in T1 mode. These codes are compatible with and do not interfere with the standard RAI (Yellow) and AIS (Blue) alarms. These codes are defined in ANSI T1.403.

The AIS-CI code (alarm indication signal-customer installation) is the same for both ESF and D4 operation. Setting the TAIS-CI bit in the T1CCR1 register and the TBL bit in the T1TCR1 register causes the DS2155 to transmit the AIS-CI code. The RAIS-CI status bit in the SR4 register indicates the reception of an AIS-CI signal.

The RAI-CI (remote alarm indication-customer installation) code for T1 ESF operation is a special form of the ESF Yellow Alarm (an unscheduled message). Setting the RAIS-CI bit in the T1CCR1 register causes the DS2155 to transmit the RAI-CI code. The RAI-CI code causes a standard Yellow Alarm to be detected by the receiver. When the host processor detects a Yellow Alarm, it can then test the alarm for the RAI-CI state by checking the BOC detector for the RAI-CI flag. That flag is a 011111 code in the 6-bit BOC message.

The RAI-CI code for T1 D4 operation is a 10001011 flag in all 24 time slots. To transmit the RAI-CI code the host sets all 24 channels to idle with a 10001011 idle code. Since this code meets the requirements for a standard T1 D4 Yellow Alarm, the host can use the receive channel monitor function to detect the 100001011 code whenever a standard Yellow Alarm is detected.

9.4 T1 Receive-Side Digital-Milliwatt Code Generation

Receive-side digital-milliwatt code generation involves using the receive digital-milliwatt registers (T1RDMR1/2/3) to determine which of the 24 T1 channels of the T1 line going to the backplane should be overwritten with a digital-milliwatt pattern. The digital-milliwatt code is an 8-byte repeating pattern that represents a 1kHz sine wave (1E/0B/0B/1E/9E/8B/8B/9E). Each bit in the T1RDMRx registers represents a particular channel. If a bit is set to a 1, then the receive data in that channel is replaced with the digital-milliwatt code. If a bit is set to 0, no replacement occurs.

Register Name: **T1RDMR1**
Register Description: **T1 Receive Digital-Milliwatt Enable Register 1**
Register Address: **0Ch**

Bit #	7	6	5	4	3	2	1	0
Name	CH8	CH7	CH6	CH5	CH4	CH3	CH2	CH1
Default	0	0	0	0	0	0	0	0

Bits 0 to 7/Receive Digital-Milliwatt Enable for Channels 1 to 8 (CH1 to CH8)

0 = do not affect the receive data associated with this channel
1 = replace the receive data associated with this channel with digital-milliwatt code

Register Name: **T1RDMR2**
Register Description: **T1 Receive Digital-Milliwatt Enable Register 2**
Register Address: **0Dh**

Bit #	7	6	5	4	3	2	1	0
Name	CH16	CH15	CH14	CH13	CH12	CH11	CH10	CH9
Default	0	0	0	0	0	0	0	0

Bits 0 to 7/Receive Digital-Milliwatt Enable for Channels 9 to 16 (CH9 to CH16)

0 = do not affect the receive data associated with this channel
1 = replace the receive data associated with this channel with digital-milliwatt code

Register Name: **T1RDMR3**
Register Description: **T1 Receive Digital-Milliwatt Enable Register 3**
Register Address: **0Eh**

Bit #	7	6	5	4	3	2	1	0
Name	CH24	CH23	CH22	CH21	CH20	CH19	CH18	CH17
Default	0	0	0	0	0	0	0	0

Bits 0 to 7/Receive Digital-Milliwatt Enable for Channels 17 to 24 (CH17 to CH24)

0 = do not affect the receive data associated with this channel
1 = replace the receive data associated with this channel with digital-milliwatt code

Register Name: **INFO1**
Register Description: **Information Register 1**
Register Address: **10h**

Bit #	7	6	5	4	3	2	1	0
Name	RPDV	TPDV	COFA	8ZD	16ZD	SEFE	B8ZS	FBE
Default	0	0	0	0	0	0	0	0

Bit 0/Frame Bit-Error Event (FBE). Set when an Ft (D4) or FPS (ESF) framing bit is received in error.

Bit 1/B8ZS Codeword Detect Event (B8ZS). Set when a B8ZS codeword is detected at RPOS and RNEG independent of whether the B8ZS mode is selected or not by T1TCR2.7. Useful for automatically setting the line coding.

Bit 2/Severely Errored Framing Event (SEFE). Set when two out of six framing bits (Ft or FPS) are received in error.

Bit 3/Sixteen Zero-Detect Event (16ZD). Set when a string of at least 16 consecutive 0s (regardless of the length of the string) have been received at RPOSI and RNEGI.

Bit 4/Eight Zero-Detect Event (8ZD). Set when a string of at least eight consecutive 0s (regardless of the length of the string) have been received at RPOSI and RNEGI.

Bit 5/Change-of-Frame Alignment Event (COFA). Set when the last resync resulted in a change-of-frame or multiframe alignment.

Bit 6/Transmit Pulse-Density Violation Event (TPDV). Set when the transmit data stream does not meet the ANSI T1.403 requirements for pulse density.

Bit 7/Receive Pulse-Density Violation Event (RPDV). Set when the receive data stream does not meet the ANSI T1.403 requirements for pulse density.

Table 9-A. T1 Alarm Criteria

ALARM	SET CRITERIA	CLEAR CRITERIA
Blue Alarm (AIS) (Note 1)	When over a 3ms window, five or fewer 0s are received	When over a 3ms window, six or more 0s are received
Yellow Alarm (RAI) D4 Bit 2 Mode (T1RCR2.0 = 0) D4 12th F-Bit Mode (T1RCR2.0 = 1; this mode is also referred to as the "Japanese Yellow Alarm") ESF Mode	When bit 2 of 256 consecutive channels is set to 0 for at least 254 occurrences When the 12th framing bit is set to 1 for two consecutive occurrences When 16 consecutive patterns of 00FF appear in the FDL	When bit 2 of 256 consecutive channels is set to 0 for fewer than 254 occurrences When the 12th framing bit is set to 0 for two consecutive occurrences When 14 or fewer patterns of 00FF hex out of 16 possible appear in the FDL
Red Alarm (LRCL) (Also referred to as loss of signal)	When 192 consecutive 0s are received	When 14 or more 1s out of 112 possible bit positions are received

Note 1: The definition of Blue Alarm (or AIS) is an unframed all-ones signal. Blue Alarm detectors should be able to operate properly in the presence of a 10E-3 error rate and they should not falsely trigger on a framed all-1s signal. Blue Alarm criteria in the DS2155 has been set to achieve this performance. It is recommended that the RBL bit be qualified with the RLOS bit.

Note 2: ANSI specifications use a different nomenclature than the DS2155 does. The following terms are equivalent:

RBL = AIS
RCL = LOS
RLOS = LOF
RYEL = RAI

10. E1 FRAMER/FORMATTER CONTROL AND STATUS REGISTERS

The E1 framer portion of the DS2155 is configured by a set of four control registers. Typically, the control registers are only accessed when the system is first powered up. Once the DS2155 has been initialized, the control registers need only to be accessed when there is a change in the system configuration. There are two receive control registers (E1RCR1 and E1RCR2) and two transmit control registers (E1TCR1 and E1TCR2). There are also four status and information registers. Each of these eight registers is described in this section.

10.1 E1 Control Registers

Register Name: **E1RCR1**
Register Description: **E1 Receive Control Register 1**
Register Address: **33h**

Bit #	7	6	5	4	3	2	1	0
Name	RSERC	RSIGM	RHDB3	RG802	RCRC4	FRC	SYNCE	RESYNC
Default	0	0	0	0	0	0	0	0

Bit 0/Resync (RESYNC). When toggled from low to high, a resync is initiated. Must be cleared and set again for a subsequent resync.

Bit 1/Sync Enable (SYNCE)
0 = auto resync enabled
1 = auto resync disabled

Bit 2/Frame Resync Criteria (FRC)
0 = resync if FAS received in error three consecutive times
1 = resync if FAS or bit 2 of non-FAS is received in error three consecutive times

Bit 3/Receive CRC4 Enable (RCRC4)
0 = CRC4 disabled
1 = CRC4 enabled

Bit 4/Receive G.802 Enable (RG802). See Section 17 for details.
0 = do not force RCHBLK high during bit 1 of time slot 26
1 = force RCHBLK high during bit 1 of time slot 26

Bit 5/Receive HDB3 Enable (RHDB3)
0 = HDB3 disabled
1 = HDB3 enabled

Bit 6/Receive Signaling Mode Select (RSIGM)
0 = CAS signaling mode
1 = CCS signaling mode

Bit 7/RSER Control (RSERC)
0 = allow RSER to output data as received under all conditions
1 = force RSER to 1 under loss-of-frame alignment conditions

Table 10-A. E1 Sync/Resync Criteria

FRAME OR MULTIFRAME LEVEL	SYNC CRITERIA	RESYNC CRITERIA	ITU SPEC.
FAS	FAS present in frame N and N + 2; FAS not present in frame N + 1	Three consecutive incorrect FAS received Alternate: (E1RCR1.2 = 1) The above criteria is met or three consecutive incorrect bit 2 of non-FAS received	G.706 4.1.1 4.1.2
CRC4	Two valid MF alignment words found within 8ms	915 or more CRC4 codewords out of 1000 received in error	G.706 4.2 and 4.3.2
CAS	Valid MF alignment word found and previous time slot 16 contains code other than all 0s	Two consecutive MF alignment words received in error	G.732 5.2

Register Name: **E1RCR2**
Register Description: **E1 Receive Control Register 2**
Register Address: **34h**

Bit #	7	6	5	4	3	2	1	0
Name	Sa8S	Sa7S	Sa6S	Sa5S	Sa4S	—	—	RCLA
Default	0	0	0	0	0	0	0	0

Bit 0/Receive Carrier-Loss (RCL) Alternate Criteria (RCLA). Defines the criteria for a receive carrier-loss condition for both the framer and LIU.

0 = RCL declared upon 255 consecutive 0s (125µs)
1 = RCL declared upon 2048 consecutive 0s (1ms)

Bits 1, 2/Unused, must be set to 0 for proper operation

Bit 3/Sa4 Bit Select (Sa4S). Set to 1 to have RLCLK pulse at the Sa4 bit position; set to 0 to force RLCLK low during Sa4 bit position. See Section 35 for details.

Bit 4/Sa5 Bit Select (Sa5S). Set to 1 to have RLCLK pulse at the Sa5 bit position; set to 0 to force RLCLK low during Sa5 bit position. See Section 35 for details.

Bit 5/Sa6 Bit Select (Sa6S). Set to 1 to have RLCLK pulse at the Sa6 bit position; set to 0 to force RLCLK low during Sa6 bit position. See Section 35 for details.

Bit 6/Sa7 Bit Select (Sa7S). Set to 1 to have RLCLK pulse at the Sa7 bit position; set to 0 to force RLCLK low during Sa7 bit position. See Section 35 for details.

Bit 7/Sa8 Bit Select (Sa8S). Set to 1 to have RLCLK pulse at the Sa8 bit position; set to 0 to force RLCLK low during Sa8 bit position. See Section 35 for details.

Register Name: **E1TCR1**
Register Description: **E1 Transmit Control Register 1**
Register Address: **35h**

Bit #	7	6	5	4	3	2	1	0
Name	TFPT	T16S	TUA1	TSiS	TSA1	THDB3	TG802	TCRC4
Default	0	0	0	0	0	0	0	0

Bit 0/Transmit CRC4 Enable (TCRC4)
0 = CRC4 disabled
1 = CRC4 enabled

Bit 1/Transmit G.802 Enable (TG802). See Section 35 for details.
0 = do not force TCHBLK high during bit 1 of time slot 26
1 = force TCHBLK high during bit 1 of time slot 26

Bit 2/Transmit HDB3 Enable (THDB3)
0 = HDB3 disabled
1 = HDB3 enabled

Bit 3/Transmit Signaling All Ones (TSA1)
0 = normal operation
1 = force time slot 16 in every frame to all ones

Bit 4/Transmit International Bit Select (TSiS)
0 = sample Si bits at TSER pin
1 = source Si bits from TAF and TNAF registers (in this mode, E1TCR1.7 must be set to 0)

Bit 5/Transmit Unframed All Ones (TUA1)
0 = transmit data normally
1 = transmit an unframed all-ones code at TPOSO and TNEGO

Bit 6/Transmit Time Slot 16 Data Select (T16S). See Section 16.2 for details.
0 = time slot 16 determined by the SSIEx registers and the THSCS function in the PCPR register
1 = source time slot 16 from TS1 to TS16 registers

Bit 7/Transmit Time Slot 0 Pass-Through (TFPT)
0 = FAS bits/Sa bits/remote alarm sourced internally from the TAF and TNAF registers
1 = FAS bits/Sa bits/remote alarm sourced from TSER

Register Name: **E1TCR2**
Register Description: **E1 Transmit Control Register 2**
Register Address: **36h**

Bit #	7	6	5	4	3	2	1	0
Name	Sa8S	Sa7S	Sa6S	Sa5S	Sa4S	AEBE	AAIS	ARA
Default	0	0	0	0	0	0	0	0

Bit 0/Automatic Remote Alarm Generation (ARA)
0 = disabled
1 = enabled

Bit 1/Automatic AIS Generation (AAIS)
0 = disabled
1 = enabled

Bit 2/Automatic E-Bit Enable (AEBE)
0 = E-bits not automatically set in the transmit direction
1 = E-bits automatically set in the transmit direction

Bit 3/Sa4 Bit Select (Sa4S). Set to 1 to source the Sa4 bit from the TLINK pin; set to 0 to not source the Sa4 bit. See Section 35 for details.

Bit 4/Sa5 Bit Select (Sa5S). Set to 1 to source the Sa5 bit from the TLINK pin; set to 0 to not source the Sa5 bit. See Section 35 for details.

Bit 5/Sa6 Bit Select (Sa6S). Set to 1 to source the Sa6 bit from the TLINK pin; set to 0 to not source the Sa6 bit. See Section 35 for details.

Bit 6/Sa7 Bit Select (Sa7S). Set to 1 to source the Sa7 bit from the TLINK pin; set to 0 to not source the Sa7 bit. See Section 35 for details.

Bit 7/Sa8 Bit Select (Sa8S). Set to 1 to source the Sa8 bit from the TLINK pin; set to 0 to not source the Sa8 bit. See Section 35 for details.

10.2 Automatic Alarm Generation

The device can be programmed to automatically transmit AIS or remote alarm. When automatic AIS generation is enabled (E1TCR2.1 = 1), the device monitors the receive-side framer to determine if any of the following conditions are present: loss-of-receive frame synchronization, AIS alarm (all ones) reception, or loss-of-receive carrier (or signal). The framer forces either an AIS or remote alarm if any one or more of these conditions is present.

When automatic RAI generation is enabled (E1TCR2.0 = 1), the framer monitors the receive side to determine if any of the following conditions are present: loss-of-receive-frame synchronization, AIS alarm (all ones) reception, loss-of-receive carrier (or signal), or if CRC4 multiframe synchronization cannot be found within 128ms of FAS synchronization (if CRC4 is enabled). If any one or more of these conditions is present, then the framer transmits an RAI alarm. RAI generation conforms to ETS 300 011 specifications and a constant remote alarm is transmitted if the DS2155 cannot find CRC4 multiframe synchronization within 400ms as per G.706.

Note: It is an invalid state to have both automatic AIS generation and automatic remote alarm generation enabled at the same time.

10.3 E1 Information Registers

Register Name: **INFO3**
Register Description: **Information Register 3**
Register Address: **12h**

Bit #	7	6	5	4	3	2	1	0
Name	—	—	—	—	—	CRCRC	FASRC	CASRC
Default	0	0	0	0	0	0	0	0

Bit 0/CAS Resync Criteria Met Event (CASRC). Set when two consecutive CAS MF alignment words are received in error.

Bit 1/FAS Resync Criteria Met Event (FASRC). Set when three consecutive FAS words are received in error. Note: During a CRC resync the FAS synchronizer is brought online to verify the FAS alignment. If during this process an FAS emulator exists, the FAS synchronizer may temporarily align to the emulator. The FASRC will go active indicating a search for a valid FAS has been activated.

Bit 2/CRC Resync Criteria Met Event (CRCRC). Set when 915/1000 codewords are received in error.

Register Name: **INFO7**
Register Description: **Information Register 7 (Real-Time, Non-Latched Register)**
Register Address: **30h**

Bit #	7	6	5	4	3	2	1	0
Name	CSC5	CSC4	CSC3	CSC2	CSC0	FASSA	CASSA	CRC4SA
Default	0	0	0	0	0	0	0	0

Bit 0/CRC4 MF Sync Active (CRC4SA). Set while the synchronizer is searching for the CRC4 MF alignment word. This is a read-only, non-latched, real-time bit. It is not necessary to precede the read of this bit with a write.

Bit 1/CAS MF Sync Active (CASSA). Set while the synchronizer is searching for the CAS MF alignment word. This is a read-only, non-latched, real-time bit. It is not necessary to precede the read of this bit with a write.

Bit 2/FAS Sync Active (FASSA). Set while the synchronizer is searching for alignment at the FAS level. This is a read-only, non-latched, real-time bit. It is not necessary to precede the read of this bit with a write.

Bits 3 to 7/CRC4 Sync Counter Bits (CSC0, CSC2 to CSC4). The CRC4 sync counter increments each time the 8ms CRC4 multiframe search times out. The counter is cleared when the framer has successfully obtained synchronization at the CRC4 level. The counter can also be cleared by disabling the CRC4 mode (E1RCR1.3 = 0). This counter is useful for determining the amount of time the framer has been searching for synchronization at the CRC4 level. ITU G.706 suggests that if synchronization at the CRC4 level cannot be obtained within 400ms, then the search should be abandoned and proper action taken. The CRC4 sync counter rolls over. CSC0 is the LSB of the 6-bit counter. (Note: The bit next to LSB is not accessible. CSC1 is omitted to allow resolution to >400ms using 5 bits.) These are read-only, non-latched, real-time bits. It is not necessary to precede the read of these bits with a write.

Table 10-B. E1 Alarm Criteria

ALARM	SET CRITERIA	CLEAR CRITERIA	ITU SPECIFICATION
RLOS	An RLOS condition exists on power-up prior to initial synchronization, when a resync criteria has been met, or when a manual resync has been initiated by E1RCR1.0		
RCL	255 or 2048 consecutive 0s received as determined by E1RCR2.0	At least 32 1s in 255-bit times are received	G.775/G.962
RRA	Bit 3 of nonalign frame set to 1 for three consecutive occasions	Bit 3 of nonalign frame set to 0 for three consecutive occasions	O.162 2.1.4
RUA1	Fewer than three 0s in two frames (512 bits)	More than two 0s in two frames (512 bits)	O.162 1.6.1.2
RDMA	Bit 6 of time slot 16 in frame 0 has been set for two consecutive multiframes		
V52LNK	Two out of three Sa7 bits are 0		G.965

11. COMMON CONTROL AND STATUS REGISTERS

Register Name: **CCR1**
Register Description: **Common Control Register 1**
Register Address: **70h**

Bit #	7	6	5	4	3	2	1	0
Name	MCLKS	CRC4R	SIE	ODM	DICAI	TCSS1	TCSS0	RLOSF
Default	0	0	0	0	0	0	0	0

Bit 0/Function of the RLOS/LOTC Output (RLOSF)
0 = receive loss of sync (RLOS)
1 = loss-of-transmit clock (LOTC)

Bit 1/Transmit Clock Source Select Bit 0 (TCSS0)

Bit 2/Transmit Clock Source Select Bit 0 (TCSS1)

TCSS1	TCSS0	Transmit Clock Source
0	0	The TCLK pin is always the source of transmit clock.
0	1	Switch to the clock present at RCLK when the signal at the TCLK pin fails to transition after 1 channel time.
1	0	Use the scaled signal present at MCLK as the transmit clock. The TCLK pin is ignored.
1	1	Use the signal present at RCLK as the transmit clock. The TCLK pin is ignored.

Bit 3/Disable Idle Code Auto Increment (DICAI). Selects/deselects the auto-increment feature for the transmit and receive idle code array address register. See Section 17.
0 = addresses in IAAR register automatically increment on every read/write operation to the PCICR register
1 = addresses in IAAR register do not automatically increment

Bit 4/Output Data Mode (ODM)
0 = pulses at TPOSO and TNEGO are one full TCLKO period wide
1 = pulses at TPOSO and TNEGO are one-half TCLKO period wide

Bit 5/Signaling Integration Enable (SIE)
0 = signaling changes of state reported on any change in selected channels
1 = signaling must be stable for three multiframes in order for a change of state to be reported

Bit 6/CRC-4 Recalculate (CRC4R)
0 = transmit CRC-4 generation and insertion operates in normal mode
1 = transmit CRC-4 generation operates according to G.706 intermediate path recalculation method

Bit 7/MCLK Source (MCLKS). Selects the source of MCLK
0 = MCLK is source from the MCLK pin
1 = MCLK is source from the TSYSCLK pin

Register Name: **IDR**
Register Description: **Device Identification Register**
Register Address: **0Fh**

Bit #	7	6	5	4	3	2	1	0
Name	ID7	ID6	ID5	ID4	ID3	ID2	ID1	ID0
Default	1	0	1	1	X	X	X	X

Bits 0 to 3/Chip Revision Bits (ID0 to ID3). The lower four bits of the IDR are used to display the die revision of the chip. IDO is the LSB of a decimal code that represents the chip revision.

Bits 4 to 7/Device ID (ID4 to ID7). The upper four bits of the IDR are used to display the DS2155 ID.

11.1 T1/E1 Status Registers

Register Name: **SR2**
Register Description: **Status Register 2**
Register Address: **18h**

Bit #	7	6	5	4	3	2	1	0
Name	RYELC	RUA1C	FRCLC	RLOSC	RYEL	RUA1	FRCL	RLOS
Default	0	0	0	0	0	0	0	0

Bit 0/Receive Loss-of-Sync Condition (RLOS). Set when the DS2155 is not synchronized to the received data stream.

Bit 1/Framer Receive Carrier-Loss Condition (FRCL). Set when 255 (or 2048 if E1RCR2.0 = 1) E1 mode or 192 T1 mode consecutive 0s have been detected at RPOSI and RNEGI.

Bit 2/Receive Unframed All-Ones (T1 Blue Alarm, E1 AIS) Condition (RUA1). Set when an unframed all 1s code is received at RPOSI and RNEGI.

Bit 3/Receive Yellow Alarm Condition (RYEL) (T1 Only). Set when a Yellow Alarm is received at RPOSI and RNEGI.

Bit 4/Receive Loss-of-Sync Clear Event (RLOSC). Set when the framer achieves synchronization; remains set until read.

Bit 5/Framer Receive Carrier-Loss Clear Event (FRCLC). Set when the carrier loss condition at RPOSI and RNEGI is no longer detected.

Bit 6/Receive Unframed All-Ones Clear Event (RUA1C). Set when the unframed all 1s condition is no longer detected.

Bit 7/Receive Yellow Alarm Clear Event (RYELC) (T1 Only). Set when the receive Yellow Alarm condition is no longer detected.

Register Name: **IMR2**
Register Description: **Interrupt Mask Register 2**
Register Address: **19h**

Bit #	7	6	5	4	3	2	1	0
Name	RYELC	RUA1C	FRCLC	RLOSC	RYEL	RUA1	FRCL	RLOS
Default	0	0	0	0	0	0	0	0

Bit 0/Receive Loss-of-Sync Condition (RLOS)
0 = interrupt masked
1 = interrupt enabled—interrupts on rising edge only

Bit 1/Framer Receive Carrier Loss Condition (FRCL)
0 = interrupt masked
1 = interrupt enabled—interrupts on rising edge only

Bit 2/Receive Unframed All-Ones (Blue Alarm) Condition (RUA1)
0 = interrupt masked
1 = interrupt enabled—interrupts on rising edge only

Bit 3/Receive Yellow Alarm Condition (RYEL)
0 = interrupt masked
1 = interrupt enabled—interrupts on rising edge only

Bit 4/Receive Loss-of-Sync Clear Event (RLOSC)
0 = interrupt masked
1 = interrupt enabled

Bit 5/Framer Receive Carrier Loss Condition Clear (FRCLC)
0 = interrupt masked
1 = interrupt enabled

Bit 6/Receive Unframed All-Ones Condition Clear Event (RUA1C)
0 = interrupt masked
1 = interrupt enabled

Bit 7/Receive Yellow Alarm Clear Event (RYELC)
0 = interrupt masked
1 = interrupt enabled

Register Name: **SR3**
Register Description: **Status Register 3**
Register Address: **1Ah**

Bit #	7	6	5	4	3	2	1	0
Name	LSPARE	LDN	LUP	LOTC	LORC	V52LNK	RDMA	RRA
Default	0	0	0	0	0	0	0	0

Bit 0/Receive Remote Alarm Condition (RRA) (E1 Only). Set when a remote alarm is received at RPOSI and RNEGI. This is a double interrupt bit. See Section 6.3.

Bit 1/Receive Distant MF Alarm Condition (RDMA) (E1 Only). Set when bit 6 of time slot 16 in frame 0 has been set for two consecutive multiframes. This alarm is not disabled in the CCS signaling mode. This is a double interrupt bit. See Section 6.3.

Bit 2/V5.2 Link Detected Condition (V52LNK) (E1 Only). Set on detection of a V5.2 link identification signal (G.965). This is a double interrupt bit. See Section 6.3.

Bit 3/Loss-of-Receive Clock Condition (LORC). Set when the RCLKI pin has not transitioned for one channel time. This is a double interrupt bit. See Section 6.3.

Bit 4/Loss-of-Transmit Clock Condition (LOTC). Set when the TCLK pin has not transitioned for one channel time. Forces the LOTC pin high if enabled by CCR1.0. This is a double interrupt bit. See Section 6.3.

Bit 5/Loop-Up Code Detected Condition (LUP) (T1 Only). Set when the loop-up code as defined in the RUPCD1/2 register is being received. See Section 25 for details. This is a double interrupt bit. See Section 6.3.

Bit 6/Loop-Down Code Detected Condition (LDN) (T1 Only). Set when the loop down code as defined in the RDNCD1/2 register is being received. See Section 25 for details. This is a double interrupt bit. See Section 6.3.

Bit 7/Spare Code Detected Condition (LSPARE) (T1 Only). Set when the spare code as defined in the RSCD1/2 registers is being received. See Section 25 for details. This is a double interrupt bit. See Section 6.3.

Register Name: **IMR3**
Register Description: **Interrupt Mask Register 3**
Register Address: **1Bh**

Bit #	7	6	5	4	3	2	1	0
Name	LSPARE	LDN	LUP	LOTC	LORC	V52LNK	RDMA	RRA
Default	0	0	0	0	0	0	0	0

Bit 0/Receive Remote Alarm Condition (RRA)
0 = interrupt masked
1 = interrupt enabled—interrupts on rising and falling edges

Bit 1/Receive Distant MF Alarm Condition (RDMA)
0 = interrupt masked
1 = interrupt enabled—interrupts on rising and falling edges

Bit 2/V5.2 Link Detected Condition (V52LNK)
0 = interrupt masked
1 = interrupt enabled—interrupts on rising and falling edges

Bit 3/Loss-of-Receive Clock Condition (LORC)
0 = interrupt masked
1 = interrupt enabled—interrupts on rising and falling edges

Bit 4/Loss-of-Transmit Clock Condition (LOTC)
0 = interrupt masked
1 = interrupt enabled—interrupts on rising and falling edges

Bit 5/Loop-Up Code-Detected Condition (LUP)
0 = interrupt masked
1 = interrupt enabled—interrupts on rising and falling edges

Bit 6/Loop-Down Code-Detected Condition (LDN)
0 = interrupt masked
1 = interrupt enabled—interrupts on rising and falling edges

Bit 7/Spare Code Detected Condition (LSPARE)
0 = interrupt masked
1 = interrupt enabled—interrupts on rising and falling edges

Register Name: **SR4**
Register Description: **Status Register 4**
Register Address: **1Ch**

Bit #	7	6	5	4	3	2	1	0
Name	RAIS-CI	RSAO	RSAZ	TMF	TAF	RMF	RCMF	RAF
Default	0	0	0	0	0	0	0	0

Bit 0/Receive Align Frame Event (RAF) (E1 Only). Set every 250µs at the beginning of align frames. Used to alert the host that Si and Sa bits are available in the RAF and RNAF registers.

Bit 1/Receive CRC4 Multiframe Event (RCMF) (E1 Only). Set on CRC4 multiframe boundaries; continues to set every 2ms on an arbitrary boundary if CRC4 is disabled.

Bit 2/Receive Multiframe Event (RMF)

E1 Mode: Set every 2ms (regardless if CAS signaling is enabled or not) on receive multiframe boundaries. Used to alert the host that signaling data is available.
T1 Mode: Set every 1.5ms on D4 MF boundaries or every 3ms on ESF MF boundaries.

Bit 3/Transmit Align Frame Event (TAF) (E1 Only). Set every 250µs at the beginning of align frames. Used to alert the host that the TAF and TNAF registers need to be updated.

Bit 4/Transmit Multiframe Event (TMF)

E1 Mode: Set every 2ms (regardless if CRC4 is enabled) on transmit multiframe boundaries. Used to alert the host that signaling data needs to be updated.
T1 Mode: Set every 1.5ms on D4 MF boundaries or every 3ms on ESF MF boundaries.

Bit 5/Receive Signaling All-Zeros Event (RSAZ) (E1 Only). Set when over a full MF, time slot 16 contains all 0s.

Bit 6/Receive Signaling All-Ones Event (RSAO) (E1 Only). Set when the contents of time slot 16 contains fewer than three 0s over 16 consecutive frames. This alarm is not disabled in the CCS signaling mode.

Bit 7/Receive AIS-CI Event (RAIS-CI) (T1 Only). Set when the receiver detects the AIS-CI pattern as defined in ANSI T1.403.

Register Name: **IMR4**
Register Description: **Interrupt Mask Register 4**
Register Address: **1Dh**

Bit #	7	6	5	4	3	2	1	0
Name	RAIS-CI	RSAO	RSAZ	TMF	TAF	RMF	RCMF	RAF
Default	0	0	0	0	0	0	0	0

Bit 0/Receive Align Frame Event (RAF)
0 = interrupt masked
1 = interrupt enabled

Bit 1/Receive CRC4 Multiframe Event (RCMF)
0 = interrupt masked
1 = interrupt enabled

Bit 2/Receive Multiframe Event (RMF)
0 = interrupt masked
1 = interrupt enabled

Bit 3/Transmit Align Frame Event (TAF)
0 = interrupt masked
1 = interrupt enabled

Bit 4/Transmit Multiframe Event (TMF)
0 = interrupt masked
1 = interrupt enabled

Bit 5/Receive Signaling All-Zeros Event (RSAZ)
0 = interrupt masked
1 = interrupt enabled

Bit 6/Receive Signaling All-Ones Event (RSAO)
0 = interrupt masked
1 = interrupt enabled

Bit 7/Receive AIS-CI Event (RAIS-CI)
0 = interrupt masked
1 = interrupt enabled

12. I/O PIN CONFIGURATION OPTIONS

Register Name: **IOCR1**
Register Description: **I/O Configuration Register 1**
Register Address: **01h**

Bit #	7	6	5	4	3	2	1	0
Name	RSMS	RSMS2	RSMS1	RSIO	TSDW	TSM	TSIO	ODF
Default	0	0	0	0	0	0	0	0

Bit 0/Output Data Format (ODF)
0 = bipolar data at TPOSO and TNEGO
1 = NRZ data at TPOSO; TNEGO = 0

Bit 1/TSYNC I/O Select (TSIO)
0 = TSYNC is an input
1 = TSYNC is an output

Bit 2/TSYNC Mode Select (TSM). Selects frame or multiframe mode for the TSYNC pin. See the timing diagrams in Section 35.
0 = frame mode
1 = multiframe mode

Bit 3/TSYNC Double-Wide (TSDW). (Note: This bit must be set to 0 when IOCR1.2 = 1 or when IOCR1.1 = 0.)
0 = do not pulse double-wide in signaling frames
1 = do pulse double-wide in signaling frames

Bit 4/RSYNC I/O Select (RSIO). (Note: This bit must be set to 0 when ESCR.0 = 0.)
0 = RSYNC is an output
1 = RSYNC is an input (only valid if elastic store enabled)

Bit 5/RSYNC Mode Select 1(RSMS1). Selects frame or multiframe pulse when RSYNC pin is in output mode. In input mode (elastic store must be enabled), multiframe mode is only useful when receive signaling reinsertion is enabled. See the timing diagrams in Section 35.
0 = frame mode
1 = multiframe mode

Bit 6/RSYNC Mode Select 2 (RSMS2)
T1 Mode: RSYNC pin must be programmed in the output frame mode (IOCR1.5 = 0, IOCR1.4 = 0).
0 = do not pulse double-wide in signaling frames
1 = do pulse double-wide in signaling frames
E1 Mode: RSYNC pin must be programmed in the output multiframe mode (IOCR1.5 = 1, IOCR1.4 = 0).
0 = RSYNC outputs CAS multiframe boundaries
1 = RSYNC outputs CRC4 multiframe boundaries

Bit 7/RSYNC Multiframe Skip Control (RSMS). Useful in framing format conversions from D4 to ESF. This function is not available when the receive-side elastic store is enabled. RSYNC must be set to output multiframe pulses (IOCR1.5 = 1 and IOCR1.4 = 0).
0 = RSYNC outputs a pulse at every multiframe
1 = RSYNC outputs a pulse at every other multiframe

Register Name: **IOCR2**
Register Description: **I/O Configuration Register 2**
Register Address: **02h**

Bit #	7	6	5	4	3	2	1	0
Name	RCLKINV	TCLKINV	RSYNCINV	TSYNCINV	TSSYNCINV	H100EN	TSCLKM	RSCLKM
Default	0	0	0	0	0	0	0	0

Bit 0/RSYSCLK Mode Select (RSCLKM)
0 = if RSYSCLK is 1.544MHz
1 = if RSYSCLK is 2.048MHz or IBO enabled (See Section 28 for details on IBO function.)

Bit 1/TSYSCLK Mode Select (TSCLKM)
0 = if TSYSCLK is 1.544MHz
1 = if TSYSCLK is 2.048MHz or IBO enabled (See Section 28 for details on IBO function.)

Bit 2/H.100 SYNC Mode (H100EN)
0 = normal operation
1 = SYNC shift

Bit 3/TSSYNC Invert (TSSYNCINV)
0 = no inversion
1 = invert

Bit 4/TSYNC Invert (TSYNCINV)
0 = no inversion
1 = invert

Bit 5/RSYNC Invert (RSYNCINV)
0 = no inversion
1 = invert

Bit 6/TCLK Invert (TCLKINV)
0 = no inversion
1 = invert

Bit 7/RCLK Invert (RCLKINV)
0 = no inversion
1 = invert

13. LOOPBACK CONFIGURATION

Register Name: **LBCR**
Register Description: **Loopback Control Register**
Register Address: **4Ah**

Bit #	7	6	5	4	3	2	1	0
Name	—	—	—	LIUC	LLB	RLB	PLB	FLB
Default	0	0	0	0	0	0	0	0

Bit 0/Framer Loopback (FLB). This loopback is useful in testing and debugging applications. In FLB, the DS2155 loops data from the transmit side back to the receive side. When FLB is enabled, the following occurs:

1) T1 Mode: An unframed all-ones code is transmitted at TPOSO and TNEGO.
   E1 Mode: Normal data is transmitted at TPOSO and TNEGO.
2) Data at RPOSI and RNEGI is ignored.
3) All receive-side signals take on timing synchronous with TCLK instead of RCLKI.
   Please note that it is not acceptable to have RCLK connected to TCLK during this loopback because this causes an unstable condition.
   0 = loopback disabled
   1 = loopback enabled

Bit 1/Payload Loopback (PLB). When PLB is enabled, the following occurs:

1) Data is transmitted from the TPOSO and TNEGO pins synchronous with RCLK instead of TCLK.
2) All the receive side signals continue to operate normally.
3) Data at the TSER, TDATA, and TSIG pins is ignored.
4) The TLCLK signal becomes synchronous with RCLK instead of TCLK.
   0 = loopback disabled
   1 = loopback enabled

   T1 Mode. Normally, this loopback is only enabled when ESF framing is being performed but can also be enabled in D4 framing applications. In a PLB situation, the DS2155 loops the 192 bits of payload data (with BPVs corrected) from the receive section back to the transmit section. The FPS framing pattern, CRC6 calculation, and the FDL bits are not looped back; they are reinserted by the DS2155.

   E1 Mode. In a PLB situation, the DS2155 loops the 248 bits of payload data (with BPVs corrected) from the receive section back to the transmit section. The transmit section modifies the payload as if it was input at TSER. The FAS word; Si, Sa, and E bits; and CRC4 are not looped back; they are reinserted by the DS2155.

Bit 2/Remote Loopback (RLB). In this loopback, data input by the RPOSI and RNEGI pins is transmitted back to the TPOSO and TNEGO pins. Data continues to pass through the receive-side framer of the DS2155 as it would normally. Data from the transmit-side formatter is ignored. See Figure 3-1 for more details.
0 = loopback disabled
1 = loopback enabled

Bit 3/Local Loopback (LLB). In this loopback, data continues to be transmitted as normal through the transmit side of the SCT. Data being received at RTIP and RRING are replaced with the data being transmitted. Data in this loopback passes through the jitter attenuator. See Figure 3-2 for more details.

0 = loopback disabled
1 = loopback enabled

Bit 4/Line Interface Unit Mux Control (LIUC). This is a software version of the LIUC pin. When the LIUC pin is connected high, the LIUC bit has control. When the LIUC pin is connected low, the framer and LIU are separated and the LIUC bit has no effect

0 = if LIUC pin connected high, LIU internally connected to framer block and deactivate the TPOSI/TNEGI/TCLKI/RPOSI/RNEGI/RCLKI pins
1 = if LIUC pin connected high, disconnect LIU from framer block and activate the TPOSI/TNEGI/TCLKI/RPOSI/RNEGI/RCLKI pins

LIUC Pin	LIUC Bit	Condition
0	0	LIU and framer separated
0	1	LIU and framer separated
1	0	LIU and framer connected
1	1	LIU and framer separated

Bits 5 to 7/Unused, must be set to 0 for proper operation

13.1 Per-Channel Loopback

The per-channel loopback registers (PCLRs) determine which channels (if any) from the backplane should be replaced with the data from the receive side or, i.e., off of the T1 or E1 line. If this loopback is enabled, then transmit and receive clocks and frame syncs must be synchronized. One method to accomplish this is to connect RCLK to TCLK and RFSYNC to TSYNC. There are no restrictions on which channels can be looped back or on how many channels can be looped back.

Each of the bit positions in the per-channel loopback registers (PCLR1/PCLR2/PCLR3/PCLR4) represents a DS0 channel in the outgoing frame. When these bits are set to a 1, data from the corresponding receive channel replaces the data on TSER for that channel.

Register Name: **PCLR1**
Register Description: **Per-Channel Loopback Enable Register 1**
Register Address: **4Bh**

Bit #	7	6	5	4	3	2	1	0
Name	CH8	CH7	CH6	CH5	CH4	CH3	CH2	CH1
Default	0	0	0	0	0	0	0	0

Bits 0 to 7/Per-Channel Loopback Enable for Channels 1 to 8 (CH1 to CH8)

0 = loopback disabled
1 = enable loopback; source data from the corresponding receive channel

Register Name: **PCLR2**
Register Description: **Per-Channel Loopback Enable Register 2**
Register Address: **4Ch**

Bit #	7	6	5	4	3	2	1	0
Name	CH16	CH15	CH14	CH13	CH12	CH11	CH10	CH9
Default	0	0	0	0	0	0	0	0

Bits 0 to 7/Per-Channel Loopback Enable for Channels 9 to 16 (CH9 to CH16)

0 = loopback disabled
1 = enable loopback; source data from the corresponding receive channel

Register Name: **PCLR3**
Register Description: **Per-Channel Loopback Enable Register 3**
Register Address: **4Dh**

Bit #	7	6	5	4	3	2	1	0
Name	CH24	CH23	CH22	CH21	CH20	CH19	CH18	CH17
Default	0	0	0	0	0	0	0	0

Bits 0 to 7/Per-Channel Loopback Enable for Channels 17 to 24 (CH17 to CH24)
0 = loopback disabled
1 = enable loopback; source data from the corresponding receive channel

Register Name: **PCLR4**
Register Description: **Per-Channel Loopback Enable Register 4**
Register Address: **4Eh**

Bit #	7	6	5	4	3	2	1	0
Name	CH32	CH31	CH30	CH29	CH28	CH27	CH26	CH25
Default	0	0	0	0	0	0	0	0

Bits 0 to 7/Per-Channel Loopback Enable for Channels 25 to 32 (CH25 to CH32)
0 = loopback disabled
1 = enable loopback; source data from the corresponding receive channel

14. ERROR COUNT REGISTERS

The DS2155 contains four counters that are used to accumulate line-coding errors, path errors, and synchronization errors. Counter update options include one-second boundaries, 42ms (T1 mode only), 62ms (E1 mode only), or manual. See *Error-Counter Configuration Register (ERCNT)*. When updated automatically, the user can use the interrupt from the timer to determine when to read these registers. All four counters saturate at their respective maximum counts, and they do not roll over. Note: Only the line-code violation count register has the potential to overflow, but the bit error would have to exceed 10E-2 before this would occur.

Register Name: **ERCNT**
Register Description: **Error-Counter Configuration Register**
Register Address: **41h**

Bit #	7	6	5	4	3	2	1	0
Name	—	MECU	ECUS	EAMS	VCRFS	FSBE	MOSCRF	LCVCRF
Default	0	0	0	0	0	0	0	0

Bit 0/T1 Line-Code Violation Count Register Function Select (LCVCRF)
0 = do not count excessive 0s
1 = count excessive 0s

Bit 1/Multiframe Out-of-Sync Count Register Function Select (MOSCRF)
0 = count errors in the framing bit position
1 = count the number of multiframes out-of-sync

Bit 2/PCVCR Fs-Bit Error-Report Enable (FSBE)
0 = do not report bit errors in Fs-bit position; only Ft-bit position
1 = report bit errors in Fs-bit position as well as Ft-bit position

Bit 3/E1 Line-Code Violation Count Register Function Select (VCRFS)
0 = count bipolar violations (BPVs)
1 = count code violations (CVs)

Bit 4/Error-Accumulation Mode Select (EAMS)
0 = ERCNT.5 determines accumulation time
1 = ERCNT.6 determines accumulation time

Bit 5/Error-Counter Update Select (ECUS)
T1 Mode:
0 = update error counters once a second
1 = update error counters every 42ms (333 frames)
E1 Mode:
0 = update error counters once a second
1 = update error counters every 62.5ms (500 frames)

Bit 6/Manual Error-Counter Update (MECU). When enabled by ERCNT.4, the changing of this bit from a 0 to a 1 allows the next clock cycle to load the error-counter registers with the latest counts and reset the counters. The user must wait a minimum of 1.5 RCLK clock periods before reading the error count registers to allow for proper update.

Bit 7/Unused, must be set to 0 for proper operation

14.1 Line-Code Violation Count Register (LCVCR)

14.1.1 T1 Operation

T1 code violations are defined as bipolar violations (BPVs) or excessive 0s. If the B8ZS mode is set for the receive side, then B8ZS codewords are not counted. This counter is always enabled; it is not disabled during receive loss-of-synchronization (RLOS = 1) conditions. Table 14-A shows what the LCVCRs count.

Table 14-A. T1 Line Code Violation Counting Options

COUNT EXCESSIVE ZEROS? (ERCNT.0)	B8ZS ENABLED? (T1RCR2.5)	COUNTED IN THE LCVCRs
No	No	BPVs
Yes	No	BPVs + 16 consecutive 0s
No	Yes	BPVs (B8ZS codewords not counted)
Yes	Yes	BPVs + 8 consecutive 0s

14.1.2 E1 Operation

Either bipolar violations or code violations can be counted. Bipolar violations are defined as consecutive marks of the same polarity. In this mode, if the HDB3 mode is set for the receive side, then HDB3 codewords are not counted as BPVs. If ERCNT.3 is set, then the LVC counts code violations as defined in ITU O.161. Code violations are defined as consecutive bipolar violations of the same polarity. In most applications, the framer should be programmed to count BPVs when receiving AMI code and to count CVs when receiving HDB3 code. This counter increments at all times and is not disabled by loss-of-sync conditions. The counter saturates at 65,535 and does not roll over. The bit-error rate on an E1 line would have to be greater than 10^{-2} before the VCR would saturate (Table 14-B).

Table 14-B. E1 Line-Code Violation Counting Options

E1 CODE VIOLATION SELECT (ERCNT.3)	COUNTED IN THE LCVCRs
0	BPVs
1	CVs

Register Name: **LCVCR1**
Register Description: **Line-Code Violation Count Register 1**
Register Address: **42h**

Bit #	7	6	5	4	3	2	1	0
Name	LCVC15	LCVC14	LCVC13	LCVC12	LCVC11	LCVC10	LCVC9	LCCV8
Default	0	0	0	0	0	0	0	0

Bits 0 to 7/Line-Code Violation Counter Bits 8 to 15 (LCVC8 to LCVC15). LCV15 is the MSB of the 16-bit code violation count.

Register Name: **LCVCR2**
Register Description: **Line-Code Violation Count Register 2**
Register Address: **43h**

Bit #	7	6	5	4	3	2	1	0
Name	LCVC7	LCVC6	LCVC5	LCVC4	LCVC3	LCVC2	LCVC1	LCVC0
Default	0	0	0	0	0	0	0	0

Bits 0 to 7/Line-Code Violation Counter Bits 0 to 7 (LCVC0 to LCVC7). LCV0 is the LSB of the 16-bit code violation count.

14.2 Path Code Violation Count Register (PCVCR)

14.2.1 T1 Operation

The path code violation count register records Ft, Fs, or CRC6 errors in T1 frames. When the receive side of a framer is set to operate in the T1 ESF framing mode, PCVCR records errors in the CRC6 codewords. When set to operate in the T1 D4 framing mode, PCVCR counts errors in the Ft framing bit position. Through the ERCNT.2 bit, a framer can be programmed to also report errors in the Fs framing bit position. The PCVCR is disabled during receive loss-of-synchronization (RLOS = 1) conditions. Table 14-C shows what errors the PCVCR counts.

Table 14-C. T1 Path Code Violation Counting Arrangements

FRAMING MODE	COUNT Fs ERRORS?	COUNTED IN THE PCVCRs
D4	No	Errors in the Ft pattern
D4	Yes	Errors in both the Ft and Fs patterns
ESF	Don't Care	Errors in the CRC6 codewords

14.2.2 E1 Operation

The path code violation-count register records CRC4 errors. Since the maximum CRC4 count in a one-second period is 1000, this counter cannot saturate. The counter is disabled during loss-of-sync at either the FAS or CRC4 level; it continues to count if loss-of-multiframe sync occurs at the CAS level.

Path code violation-count register 1 (PCVCR1) is the most significant word and PCVCR2 is the least significant word of a 16-bit counter that records path violations (PVs).

Register Name: **PCVCR1**
Register Description: **Path Code Violation Count Register 1**
Register Address: **44h**

Bit #	7	6	5	4	3	2	1	0
Name	PCVC15	PCVC14	PCVC13	PCVC12	PCVC11	PCVC10	PCVC9	PCVC8
Default	0	0	0	0	0	0	0	0

Bits 0 to 7/Path Code Violation Counter Bits 8 to 15 (PCVC8 to PCVC15). PCVC15 is the MSB of the 16-bit path code violation count.

Register Name: **PCVCR2**
Register Description: **Path Code Violation Count Register 2**
Register Address: **45h**

Bit #	7	6	5	4	3	2	1	0
Name	PCVC7	PCVC6	PCVC5	PCVC4	PCVC3	PCVC2	PCVC1	PCVC0
Default	0	0	0	0	0	0	0	0

Bits 0 to 7/Path Code Violation Counter Bits 0 to 7 (PCVC0 to PCVC7). PCVC0 is the LSB of the 16-bit path code violation count.

14.3 Frames Out-of-Sync Count Register (FOSCR)

14.3.1 T1 Operation

The FOSCR is used to count the number of multiframes that the receive synchronizer is out of sync. This number is useful in ESF applications needing to measure the parameters loss-of-frame count (LOFC) and ESF error events as described in AT&T publication TR54016. When the FOSCR is operated in this mode, it is not disabled during receive loss-of-synchronization (RLOS = 1) conditions. The FOSCR has an alternate operating mode whereby it counts either errors in the Ft framing pattern (in the D4 mode) or errors in the FPS framing pattern (in the ESF mode). When the FOSCR is operated in this mode, it is disabled during receive loss-of-synchronization (RLOS = 1) conditions. Table 14-D shows what the FOSCR is capable of counting.

Table 14-D. T1 Frames Out-of-Sync Counting Arrangements

FRAMING MODE (T1RCR1.3)	COUNT MOS OR F-BIT ERRORS (ERCNT.1)	COUNTED IN THE FOSCRs
D4	MOS	Number of multiframes out-of-sync
D4	F-Bit	Errors in the Ft pattern
ESF	MOS	Number of multiframes out-of-sync
ESF	F-Bit	Errors in the FPS pattern

14.3.2 E1 Operation

The FOSCR counts word errors in the FAS in time slot 0. This counter is disabled when RLOS is high. FAS errors are not counted when the framer is searching for FAS alignment and/or synchronization at either the CAS or CRC4 multiframe level. Since the maximum FAS word error count in a one-second period is 4000, this counter cannot saturate.

The frames out-of-sync count register 1 (FOSCR1) is the most significant word and FOSCR2 is the least significant word of a 16-bit counter that records frames out-of-sync.

Register Name: **FOSCR1**
Register Description: **Frames Out-of-Sync Count Register 1**
Register Address: **46h**

Bit #	7	6	5	4	3	2	1	0
Name	FOS15	FOS14	FOS13	FOS12	FOS11	FOS10	FOS9	FOS8
Default	0	0	0	0	0	0	0	0

Bits 0 to 7/Frames Out-of-Sync Counter Bits 8 to 15 (FOS8 to FOS15). FOS15 is the MSB of the 16-bit frames out-of-sync count.

Register Name: **FOSCR2**
Register Description: **Frames Out-of-Sync Count Register 2**
Register Address: **47h**

Bit #	7	6	5	4	3	2	1	0
Name	FOS7	FOS6	FOS5	FOS4	FOS3	FOS2	FOS1	FOS0
Default	0	0	0	0	0	0	0	0

Bits 0 to 7/Frames Out-of-Sync Counter Bits 0 to 7 (FOS0 to FOS7). FOS0 is the LSB of the 16-bit frames out-of-sync count.

14.4 E-Bit Counter (EBCR)

This counter is only available in E1 mode. E-bit count register 1 (EBCR1) is the most significant word and EBCR2 is the least significant word of a 16-bit counter that records far-end block errors (FEBE) as reported in the first bit of frames 13 and 15 on E1 lines running with CRC4 multiframe. These count registers increment once each time the received E-bit is set to 0. Since the maximum E-bit count in a one-second period is 1000, this counter cannot saturate. The counter is disabled during loss-of-sync at either the FAS or CRC4 level; it continues to count if loss-of-multiframe sync occurs at the CAS level.

Register Name: **EBCR1**
Register Description: **E-Bit Count Register 1**
Register Address: **48h**

Bit #	7	6	5	4	3	2	1	0
Name	EB15	EB14	EB13	EB12	EB11	EB10	EB9	EB8
Default	0	0	0	0	0	0	0	0

Bits 0 to 7/E-Bit Counter Bits 8 to 15 (EB8 to EB15). EB15 is the MSB of the 16-bit E-bit count.

Register Name: **EBCR2**
Register Description: **E-Bit Count Register 2**
Register Address: **49h**

Bit #	7	6	5	4	3	2	1	0
Name	EB7	EB6	EB5	EB4	EB3	EB2	EB1	EB0
Default	0	0	0	0	0	0	0	0

Bits 0 to 7/E-Bit Counter Bits 0 to 7 (EB0 to EB7). EB0 is the LSB of the 16-bit E-bit count.

15. DS0 MONITORING FUNCTION

The DS2155 has the ability to monitor one DS0 64kbps channel in the transmit direction and one DS0 channel in the receive direction at the same time. In the transmit direction, the user determines which channel is to be monitored by properly setting the TCM0 to TCM4 bits in the TDS0SEL register. In the receive direction, the RCM0 to RCM4 bits in the RDS0SEL register need to be properly set. The DS0 channel pointed to by the TCM0 to TCM4 bits appear in the transmit DS0 monitor (TDS0M) register. The DS0 channel pointed to by the RCM0 to RCM4 bits appear in the receive DS0 (RDS0M) register. The TCM4 to TCM0 and RCM4 to RCM0 bits should be programmed with the decimal decode of the appropriate T1or E1 channel. T1 channels 1 through 24 map to register values 0 through 23. E1 channels 1 through 32 map to register values 0 through 31. For example, if DS0 channel 6 in the transmit direction and DS0 channel 15 in the receive direction needed to be monitored, then the following values would be programmed into TDS0SEL and RDS0SEL:

TCM4 = 0	RCM4 = 0
TCM3 = 0	RCM3 = 1
TCM2 = 1	RCM2 = 1
TCM1 = 0	RCM1 = 1
TCM0 = 1	RCM0 = 0

Register Name: **TDS0SEL**
Register Description: **Transmit Channel Monitor Select**
Register Address: **74h**

Bit #	7	6	5	4	3	2	1	0
Name	—	—	—	TCM4	TCM3	TCM2	TCM1	TCM0
Default	0	0	0	0	0	0	0	0

Bits 0 to 4/Transmit Channel Monitor Bits (TCM0 to TCM4). TCM0 is the LSB of a 5-bit channel select that determines which transmit channel data appear in the TDS0M register.

Bits 5 to 7/Unused, must be set to 0 for proper operation

Register Name: **TDS0M**
Register Description: **Transmit DS0 Monitor Register**
Register Address: **75h**

Bit #	7	6	5	4	3	2	1	0
Name	B1	B2	B3	B4	B5	B6	B7	B8
Default	0	0	0	0	0	0	0	0

Bits 0 to 7/Transmit DS0 Channel Bits (B1 to B8). Transmit channel data that has been selected by the transmit channel monitor select register. B8 is the LSB of the DS0 channel (last bit to be transmitted).

Register Name: **RDS0SEL**
Register Description: **Receive Channel Monitor Select**
Register Address: **76h**

Bit #	7	6	5	4	3	2	1	0
Name	—	—	—	RCM4	RCM3	RCM2	RCM1	RCM0
Default	0	0	0	0	0	0	0	0

Bits 0 to 4/Receive Channel Monitor Bits (RCM0 to RCM4). RCM0 is the LSB of a 5-bit channel select that determines which receive DS0 channel data appear in the RDS0M register.

Bits 5 to 7/Unused, must be set to 0 for proper operation

Register Name: **RDS0M**
Register Description: **Receive DS0 Monitor Register**
Register Address: **77h**

Bit #	7	6	5	4	3	2	1	0
Name	B1	B2	B3	B4	B5	B6	B7	B8
Default	0	0	0	0	0	0	0	0

Bits 0 to 7/Receive DS0 Channel Bits (B1 to B8). Receive channel data that has been selected by the receive channel monitor select register. B8 is the LSB of the DS0 channel (last bit to be received).

16. SIGNALING OPERATION

There are two methods to access receive signaling data and provide transmit signaling data, processor-based (software-based) or hardware-based. Processor-based refers to access through the transmit and receive signaling registers RS1–RS16 and TS1–TS16. Hardware-based refers to the TSIG and RSIG pins. Both methods can be used simultaneously.

16.1 Receive Signaling

Figure 16-1. Simplified Diagram of Receive Signaling Path

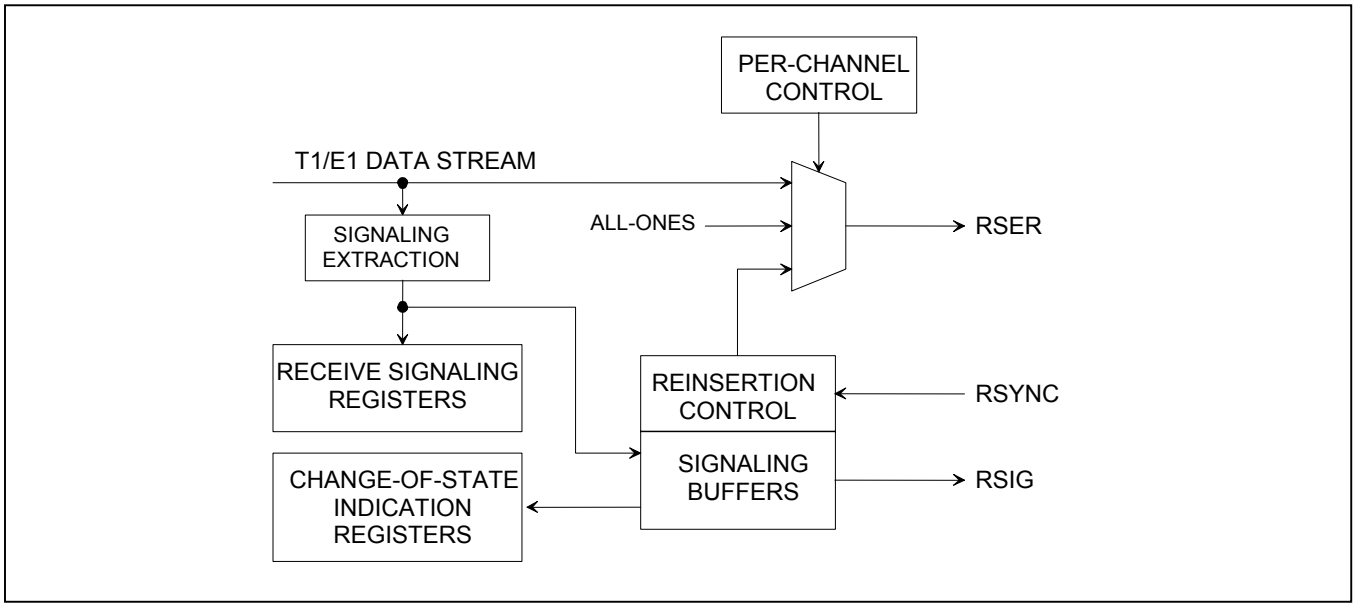

16.1.1 Processor-Based Signaling

The robbed-bit signaling (T1) or TS16 CAS signaling (E1) is sampled in the receive data stream and copied into the receive signaling registers, RS1–RS16. In T1 mode, only RS1–RS12 are used. The signaling information in these registers is always updated on multiframe boundaries. This function is always enabled.

16.1.1.1 Change-of-State

To avoid constant monitoring of the receive signaling registers, the DS2155 can be programmed to alert the host when any specific channel or channels undergo a change of their signaling state. RSCSE1–RSCSE4 for E1 and RSCSE1–RSCSE3 for T1 are used to select which channels can cause a change-of-state indication. The change-of-state is indicated in status register 5 (SR1.5). If signaling integration (CCR1.5) is enabled, then the new signaling state must be constant for three multiframes before a change-of-state is indicated. The user can enable the INT pin to toggle low upon detection of a change in signaling by setting the IMR1.5 bit. The signaling integration mode is global and cannot be enabled on a channel-by-channel basis.

The user can identity which channels have undergone a signaling change-of-state by reading the RSINFO1–RSINFO4 registers. The information from these registers inform the user which RSx register to read for the new signaling data. All changes are indicated in the RSINFO1–RSINFO4 registers regardless of the RSCSE1–RSCSE4 registers.

16.1.2 Hardware-Based Receive Signaling

In hardware-based signaling the signaling data can be obtained from the RSER pin or the RSIG pin. RSIG is a signaling PCM stream output on a channel-by-channel basis from the signaling buffer. The signaling data, T1 robbed bit or E1 TS16, is still present in the original data stream at RSER. The signaling buffer provides signaling data to the RSIG pin and also allows signaling data to be reinserted into the original data stream in a different alignment that is determined by a multiframe signal from the RSYNC pin. In this mode, the receive elastic store can be enabled or disabled. If the receive elastic store is enabled, then the backplane clock (RSYSCLK) can be either 1.544MHz or 2.048MHz. In the ESF framing mode, the ABCD signaling bits are output on RSIG in the lower nibble of each channel. The RSIG data is updated once a multiframe (3ms) unless a freeze is in effect. In the D4 framing mode, the AB signaling bits are output twice on RSIG in the lower nibble of each channel. Hence, bits 5 and 6 contain the same data as bits 7 and 8, respectively, in each channel. The RSIG data is updated once a multiframe (1.5ms) unless a freeze is in effect. See the timing diagrams in Section 35 for some examples.

16.1.2.1 Receive Signaling Reinsertion at RSER

In this mode, the user provides a multiframe sync at the RSYNC pin and the signaling data is reinserted based on this alignment. In T1 mode, this results in two copies of the signaling data in the RSER data stream, the original signaling data and the realigned data. This is of little consequence in voice channels. Reinsertion can be avoided in data channels since this feature is activated on a per-channel basis. In this mode, the elastic store must be enabled; however, the backplane clock can be either 1.544MHz or 2.048MHz.

Signaling reinsertion can be enabled on a per-channel basis by setting the RSRCS bit high in the PCPR register. The channels that will have signaling reinserted are selected by writing to the PCDR1–PCDR3 registers for T1 mode and PCDR1–PCDR4 registers for E1 mode. In E1 mode, the user generally selects all channels or none for reinsertion. In E1 mode, signaling reinsertion on all channels can be enabled with a single bit, SIGCR.7 (GRSRE). This bit allows the user to reinsert all signaling channels without having to program all channels through the per-channel function.

16.1.2.2 Force Receive Signaling All Ones

In T1 mode, the user can, on a per-channel basis, force the robbed-bit signaling bit positions to a 1 by using the per-channel register (Section 7). The user sets the BTCS bit in the PCPR register. The channels that will be forced to 1 are selected by writing to the PCDR1–PCDR3 registers.

16.1.2.3 Receive Signaling Freeze

The signaling data in the four multiframe signaling buffers is frozen in a known good state upon either a loss of synchronization (OOF event), carrier loss, or frame slip. This action meets the requirements of BellCore TR–TSY–000170 for signaling freezing. To allow this freeze action to occur, the RFE control bit (SIGCR.4) should be set high. The user can force a freeze by setting the RFF control bit (SIGCR.3) high. The RSIGF output pin provides a hardware indication that a freeze is in effect. The four-multiframe buffer provides a three-multiframe delay in the signaling bits provided at the RSIG pin (and at the RSER pin if receive signaling reinsertion is enabled). When freezing is enabled (RFE = 1), the signaling data is held in the last-known good state until the corrupting error condition subsides. When the error condition subsides, the signaling data is held in the old state for at least an additional 9ms (or 4.5ms in D4 framing mode) before updating with new signaling data.

Register Name: **SIGCR**
Register Description: **Signaling Control Register**
Register Address: **40h**

Bit #	7	6	5	4	3	2	1	0
Name	GRSRE	—	—	RFE	RFF	RCCS	TCCS	FRSAO
Default	0	0	0	0	0	0	0	0

Bit 0/Force Receive Signaling All Ones (FRSAO). In T1 mode, this bit forces all signaling data at the RSIG and RSER pin to all ones. This bit has no effect in E1 mode.

0 = normal signaling data at RSIG and RSER
1 = force signaling data at RSIG and RSER to all ones

Bit 1/Transmit Time Slot Control for CAS Signaling (TCCS). Controls the order that signaling is transmitted from the transmit signaling registers. This bit should be set = 0 in T1 mode.

0 = signaling data is CAS format
1 = signaling data is CCS format

Bit 2/Receive Time Slot Control for CAS Signaling (RCCS). Controls the order that signaling is placed into the receive signaling registers. This bit should be set = 0 in T1 mode.

0 = signaling data is CAS format
1 = signaling data is CCS format

Bit 3/Receive Force Freeze (RFF). Freezes receive-side signaling at RSIG (and RSER if receive signaling reinsertion is enabled); overrides receive freeze enable (RFE). See Section 16.1.2.3 for details.

0 = do not force a freeze event
1 = force a freeze event

Bit 4/Receive Freeze Enable (RFE). See Section 16.1.2.3 for details.

0 = no freezing of receive signaling data occurs
1 = allow freezing of receive signaling data at RSIG (and RSER if receive signaling reinsertion is enabled)

Bits 5, 6/Unused, must be set to 0 for proper operation

Bit 7/Global Receive Signaling Reinsertion Enable (GRSRE). This bit allows the user to reinsert all signaling channels without programming all channels through the per-channel function.

0 = do not reinsert all signaling
1 = reinsert all signaling

Register Name: **RS1 to RS12**
Register Description: **Receive Signaling Registers (T1 Mode, ESF Format)**
Register Address: **60h to 6Bh**

(MSB)							**(LSB)**	
CH2-A	CH2-B	CH2-C	CH2-D	CH1-A	CH1-B	CH1-C	CH1-D	RS1
CH4-A	CH4-B	CH4-C	CH4-D	CH3-A	CH3-B	CH3-C	CH3-D	RS2
CH6-A	CH6-B	CH6-C	CH6-D	CH5-A	CH5-B	CH5-C	CH5-D	RS3
CH8-A	CH8-B	CH8-C	CH8-D	CH7-A	CH7-B	CH7-C	CH7-D	RS4
CH10-A	CH10-B	CH10-C	CH10-D	CH9-A	CH9-B	CH9-C	CH9-D	RS5
CH12-A	CH12-B	CH12-C	CH12-D	CH11-A	CH11-B	CH11-C	CH11-D	RS6
CH14-A	CH14-B	CH14-C	CH14-D	CH13-A	CH13-B	CH13-C	CH13-D	RS7
CH16-A	CH16-B	CH16-C	CH16-D	CH15-A	CH15-B	CH15-C	CH15-D	RS8
CH18-A	CH18-B	CH18-C	CH18-D	CH17-A	CH17-B	CH17-C	CH17-D	RS9
CH20-A	CH20-B	CH20-C	CH20-D	CH19-A	CH19-B	CH19-C	CH19-D	RS10
CH22-A	CH22-B	CH22-C	CH22-D	CH21-A	CH21-B	CH21-C	CH21-D	RS11
CH24-A	CH24-B	CH24-C	CH24-D	CH23-A	CH23-B	CH23-C	CH23-D	RS12

Register Name: **RS1 to RS12**
Register Description: **Receive Signaling Registers (T1 Mode, D4 Format)**
Register Address: **60h to 6Bh**

(MSB)							**(LSB)**	
CH2-A	CH2-B	**CH2-A**	**CH2-B**	CH1-A	CH1-B	**CH1-A**	**CH1-B**	RS1
CH4-A	CH4-B	**CH4-A**	**CH4-B**	CH3-A	CH3-B	**CH3-A**	**CH3-B**	RS2
CH6-A	CH6-B	**CH6-A**	**CH6-B**	CH5-A	CH5-B	**CH5-A**	**CH5-B**	RS3
CH8-A	CH8-B	**CH8-A**	**CH8-B**	CH7-A	CH7-B	**CH7-A**	**CH7-B**	RS4
CH10-A	CH10-B	**CH10-A**	**CH10-B**	CH9-A	CH9-B	**CH9-A**	**CH9-B**	RS5
CH12-A	CH12-B	**CH12-A**	**CH12-B**	CH11-A	CH11-B	**CH11-A**	**CH11-B**	RS6
CH14-A	CH14-B	**CH14-A**	**CH14-B**	CH13-A	CH13-B	**CH13-A**	**CH13-B**	RS7
CH16-A	CH16-B	**CH16-A**	**CH16-B**	CH15-A	CH15-B	**CH15-A**	**CH15-B**	RS8
CH18-A	CH18-B	**CH18-A**	**CH18-B**	CH17-A	CH17-B	**CH17-A**	**CH17-B**	RS9
CH20-A	CH20-B	**CH20-A**	**CH20-B**	CH19-A	CH19-B	**CH19-A**	**CH19-B**	RS10
CH22-A	CH22-B	**CH22-A**	**CH22-B**	CH21-A	CH21-B	**CH21-A**	**CH21-B**	RS11
CH24-A	CH24-B	**CH24-A**	**CH24-B**	CH23-A	CH23-B	**CH23-A**	**CH23-B**	RS12

Note: In D4 format, TS1–TS12 contain signaling data for two frames. Bold type indicates data for second frame.

Register Name: **RS1 to RS16**
Register Description: **Receive Signaling Registers (E1 Mode, CAS Format)**
Register Address: **60h to 6Fh**

(MSB)							**(LSB)**	
0	0	0	0	X	Y	X	X	RS1
CH2-A	CH2-B	CH2-C	CH2-D	CH1-A	CH1-B	CH1-C	CH1-D	RS2
CH4-A	CH4-B	CH4-C	CH4-D	CH3-A	CH3-B	CH3-C	CH3-D	RS3
CH6-A	CH6-B	CH6-C	CH6-D	CH5-A	CH5-B	CH5-C	CH5-D	RS4
CH8-A	CH8-B	CH8-C	CH8-D	CH7-A	CH7-B	CH7-C	CH7-D	RS5
CH10-A	CH10-B	CH10-C	CH10-D	CH9-A	CH9-B	CH9-C	CH9-D	RS6
CH12-A	CH12-B	CH12-C	CH12-D	CH11-A	CH11-B	CH11-C	CH11-D	RS7
CH14-A	CH14-B	CH14-C	CH14-D	CH13-A	CH13-B	CH13-C	CH13-D	RS8
CH16-A	CH16-B	CH16-C	CH16-D	CH15-A	CH15-B	CH15-C	CH15-D	RS9
CH18-A	CH18-B	CH18-C	CH18-D	CH17-A	CH17-B	CH17-C	CH17-D	RS10
CH20-A	CH20-B	CH20-C	CH20-D	CH19-A	CH19-B	CH19-C	CH19-D	RS11
CH22-A	CH22-B	CH22-C	CH22-D	CH21-A	CH21-B	CH21-C	CH21-D	RS12
CH24-A	CH24-B	CH24-C	CH24-D	CH23-A	CH23-B	CH23-C	CH23-D	RS13
CH26-A	CH26-B	CH26-C	CH26-D	CH25-A	CH25-B	CH25-C	CH25-D	RS14
CH28-A	CH28-B	CH28-C	CH28-D	CH27-A	CH27-B	CH27-C	CH27-D	RS15
CH30-A	CH30-B	CH30-C	CH30-D	CH29-A	CH29-B	CH29-C	CH29-D	RS16

Register Name: **RS1 to RS16**
Register Description: **Receive Signaling Registers (E1 Mode, CCS Format)**
Register Address: **60h to 6Fh**

(MSB)							**(LSB)**	
1	2	3	4	5	6	7	8	RS1
9	10	11	12	13	14	15	16	RS2
17	18	19	20	21	22	23	24	RS3
25	26	27	28	29	30	31	32	RS4
33	34	35	36	37	38	39	40	RS5
41	42	43	44	45	46	47	48	RS6
49	50	51	52	53	54	55	56	RS7
57	58	59	60	61	62	63	64	RS8
65	66	67	68	69	70	71	72	RS9
73	74	75	76	77	78	79	80	RS10
81	82	83	84	85	86	87	88	RS11
89	90	91	92	93	94	95	96	RS12
97	98	99	100	101	102	103	104	RS13
105	106	107	108	109	110	111	112	RS14
113	114	115	116	117	118	119	120	RS15
121	122	123	124	125	126	127	128	RS16

Register Name: **RSCSE1, RSCSE2, RSCSE3, RSCSE4**
Register Description: **Receive Signaling Change-of-State Interrupt Enable**
Register Address: **3Ch, 3Dh, 3Eh, 3Fh**

(MSB)							**(LSB)**	
CH8	CH7	CH6	CH5	CH4	CH3	CH2	CH1	RSCSE1
CH16	CH15	CH14	CH13	CH12	CH11	CH10	CH9	RSCSE2
CH24	CH23	CH22	CH21	CH20	CH19	CH18	CH17	RSCSE3
		CH30	CH29	CH28	CH27	CH26	CH25	RSCSE4

Setting any of the CH1–CH30 bits in the RSCSE1–RSCSE4 registers causes an interrupt when that channel's signaling data changes state.

Register Name: **RSINFO1, RSINFO2, RSINFO3, RSINFO4**
Register Description: **Receive Signaling Change-of-State Information**
Register Address: **38h, 39h, 3Ah, 3Bh**

(MSB)							**(LSB)**	
CH8	CH7	CH6	CH5	CH4	CH3	CH2	CH1	RSINFO1
CH16	CH15	CH14	CH13	CH12	CH11	CH10	CH9	RSINFO2
CH24	CH23	CH22	CH21	CH20	CH19	CH18	CH17	RSINFO3
		CH30	CH29	CH28	CH27	CH26	CH25	RSINFO4

When a channel's signaling data changes state, the respective bit in registers RSINFO1–4 is set. An interrupt is generated if the channel was also enabled as an interrupt source by setting the appropriate bit in RSCSE1–4. The bit remains set until read.

16.2 Transmit Signaling

Figure 16-2. Simplified Diagram of Transmit Signaling Path

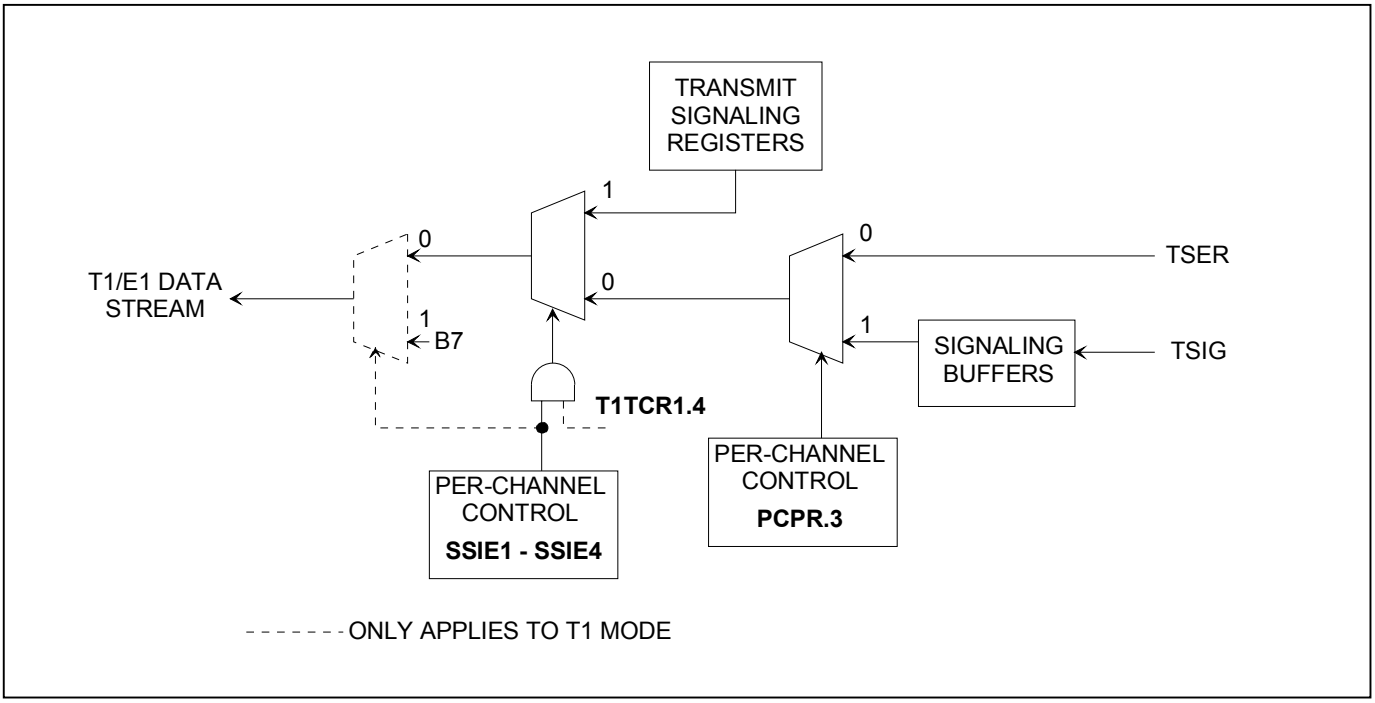

16.2.1 Processor-Based Mode

In processor-based mode, signaling data is loaded into the transmit signaling registers (TS1–TS16) by the host interface. On multiframe boundaries, the contents of these registers are loaded into a shift register for placement in the appropriate bit position in the outgoing data stream. The user can employ the transmit multiframe interrupt in status register 4 (SR4.4) to know when to update the signaling bits. The user need not update any transmit signaling register for which there is no change-of-state for that register.

Each transmit signaling register contains the robbed-bit signaling (T1) or TS16 CAS signaling (E1) for two time slots that are inserted into the outgoing stream, if enabled to do so through T1TCR1.4 (T1 mode) or E1TCR1.6 (E1 mode). In T1 mode, only TS1–TS12 are used.

Signaling data can be sourced from the TS registers on a per-channel basis by using the software signaling insertion enable registers, SSIE1–SSIE4.

16.2.1.1 T1 Mode

In T1 ESF framing mode, there are four signaling bits per channel (A, B, C, and D). TS1–TS12 contain a full multiframe of signaling data. In T1 D4 framing mode, there are only two signaling bits per channel (A and B). In T1 D4 framing mode, the framer uses the C and D bit positions as the A and B bit positions for the next multiframe. In D4 mode, two multiframes of signaling data can be loaded into TS1–TS12. The framer loads the contents of TS1–TS12 into the outgoing shift register every other D4 multiframe. In D4 mode, the host should load new contents into TS1–TS12 on every other multiframe boundary and no later than 120µs after the boundary.

16.2.1.2 E1 Mode

In E1 mode, TS16 carries the signaling information. This information can be in either CCS (common channel signaling) or CAS (channel associated signaling) format. The 32 time slots are referenced by two different channel number schemes in E1. In “Channel” numbering, TS0–TS31 are labeled channels 1 through 32. In “Phone Channel” numbering, TS1–TS15 are labeled channel 1 through channel 15 and TS17–TS31 are labeled channel 15 through channel 30.

Table 16-A. Time Slot Numbering Schemes

TS	0	1	2	3	4	5	6	7	8	9	10	11	12	13	14	15	16	17	18	19	20	21	22	23	24	25	26	27	28	29	30	31
Channel	1	2	3	4	5	6	7	8	9	10	11	12	13	14	15	16	17	18	19	20	21	22	23	24	25	26	27	28	29	30	31	32
Phone Channel		1	2	3	4	5	6	7	8	9	10	11	12	13	14	15		16	17	18	19	20	21	22	23	24	25	26	27	28	29	30

Register Name: **TS1 to TS16**
Register Description: **Transmit Signaling Registers (E1 Mode, CAS Format)**
Register Address: **50h to 5Fh**

(MSB)							**(LSB)**	
0	0	0	0	X	Y	X	X	TS1
CH2-A	CH2-B	CH2-C	CH2-D	CH1-A	CH1-B	CH1-C	CH1-D	TS2
CH4-A	CH4-B	CH4-C	CH4-D	CH3-A	CH3-B	CH3-C	CH3-D	TS3
CH6-A	CH6-B	CH6-C	CH6-D	CH5-A	CH5-B	CH5-C	CH5-D	TS4
CH8-A	CH8-B	CH8-C	CH8-D	CH7-A	CH7-B	CH7-C	CH7-D	TS5
CH10-A	CH10-B	CH10-C	CH10-D	CH9-A	CH9-B	CH9-C	CH9-D	TS6
CH12-A	CH12-B	CH12-C	CH12-D	CH11-A	CH11-B	CH11-C	CH11-D	TS7
CH14-A	CH14-B	CH14-C	CH14-D	CH13-A	CH13-B	CH13-C	CH13-D	TS8
CH16-A	CH16-B	CH16-C	CH16-D	CH15-A	CH15-B	CH15-C	CH15-D	TS9
CH18-A	CH18-B	CH18-C	CH18-D	CH17-A	CH17-B	CH17-C	CH17-D	TS10
CH20-A	CH20-B	CH20-C	CH20-D	CH19-A	CH19-B	CH19-C	CH19-D	TS11
CH22-A	CH22-B	CH22-C	CH22-D	CH21-A	CH21-B	CH21-C	CH21-D	TS12
CH24-A	CH24-B	CH24-C	CH24-D	CH23-A	CH23-B	CH23-C	CH23-D	TS13
CH26-A	CH26-B	CH26-C	CH26-D	CH25-A	CH25-B	CH25-C	CH25-D	TS14
CH28-A	CH28-B	CH28-C	CH28-D	CH27-A	CH27-B	CH27-C	CH27-D	TS15
CH30-A	CH30-B	CH30-C	CH30-D	CH29-A	CH29-B	CH29-C	CH29-D	TS16

Register Name: **TS1 to TS16**
Register Description: **Transmit Signaling Registers (E1 Mode, CCS Format)**
Register Address: **50h to 5Fh**

(MSB)							**(LSB)**	
1	2	3	4	5	6	7	8	TS1
9	10	11	12	13	14	15	16	TS2
17	18	19	20	21	22	23	24	TS3
25	26	27	28	29	30	31	32	TS4
33	34	35	36	37	38	39	40	TS5
41	42	43	44	45	46	47	48	TS6
49	50	51	52	53	54	55	56	TS7
57	58	59	60	61	62	63	64	TS8
65	66	67	68	69	70	71	72	TS9
73	74	75	76	77	78	79	80	TS10
81	82	83	84	85	86	87	88	TS11
89	90	91	92	93	94	95	96	TS12
97	98	99	100	101	102	103	104	TS13
105	106	107	108	109	110	111	112	TS14
113	114	115	116	117	118	119	120	TS15
121	122	123	124	125	126	127	128	TS16

Register Name: **TS1 to TS12**
Register Description: **Transmit Signaling Registers (T1 Mode, ESF Format)**
Register Address: **50h to 5Bh**

(MSB)							**(LSB)**	
CH2-A	CH2-B	CH2-C	CH2-D	CH1-A	CH1-B	CH1-C	CH1-D	TS1
CH4-A	CH4-B	CH4-C	CH4-D	CH3-A	CH3-B	CH3-C	CH3-D	TS2
CH6-A	CH6-B	CH6-C	CH6-D	CH5-A	CH5-B	CH5-C	CH5-D	TS3
CH8-A	CH8-B	CH8-C	CH8-D	CH7-A	CH7-B	CH7-C	CH7-D	TS4
CH10-A	CH10-B	CH10-C	CH10-D	CH9-A	CH9-B	CH9-C	CH9-D	TS5
CH12-A	CH12-B	CH12-C	CH12-D	CH11-A	CH11-B	CH11-C	CH11-D	TS6
CH14-A	CH14-B	CH14-C	CH14-D	CH13-A	CH13-B	CH13-C	CH13-D	TS7
CH16-A	CH16-B	CH16-C	CH16-D	CH15-A	CH15-B	CH15-C	CH15-D	TS8
CH18-A	CH18-B	CH18-C	CH18-D	CH17-A	CH17-B	CH17-C	CH17-D	TS9
CH20-A	CH20-B	CH20-C	CH20-D	CH19-A	CH19-B	CH19-C	CH19-D	TS10
CH22-A	CH22-B	CH22-C	CH22-D	CH21-A	CH21-B	CH21-C	CH21-D	TS11
CH24-A	CH24-B	CH24-C	CH24-D	CH23-A	CH23-B	CH23-C	CH23-D	TS12

Register Name: **TS1 to TS12**
Register Description: **Transmit Signaling Registers (T1 Mode, D4 Format)**
Register Address: **50h to 5Bh**

(MSB)							**(LSB)**	
CH2-A	CH2-B	**CH2-A**	**CH2-B**	CH1-A	CH1-B	**CH1-A**	**CH1-B**	TS1
CH4-A	CH4-B	**CH4-A**	**CH4-B**	CH3-A	CH3-B	**CH3-A**	**CH3-B**	TS2
CH6-A	CH6-B	**CH6-A**	**CH6-B**	CH5-A	CH5-B	**CH5-A**	**CH5-B**	TS3
CH8-A	CH8-B	**CH8-A**	**CH8-B**	CH7-A	CH7-B	**CH7-A**	**CH7-B**	TS4
CH10-A	CH10-B	**CH10-A**	**CH10-B**	CH9-A	CH9-B	**CH9-A**	**CH9-B**	TS5
CH12-A	CH12-B	**CH12-A**	**CH12-B**	CH11-A	CH11-B	**CH11-A**	**CH11-B**	TS6
CH14-A	CH14-B	**CH14-A**	**CH14-B**	CH13-A	CH13-B	**CH13-A**	**CH13-B**	TS7
CH16-A	CH16-B	**CH16-A**	**CH16-B**	CH15-A	CH15-B	**CH15-A**	**CH15-B**	TS8
CH18-A	CH18-B	**CH18-A**	**CH18-B**	CH17-A	CH17-B	**CH17-A**	**CH17-B**	TS9
CH20-A	CH20-B	**CH20-A**	**CH20-B**	CH19-A	CH19-B	**CH19-A**	**CH19-B**	TS10
CH22-A	CH22-B	**CH22-A**	**CH22-B**	CH21-A	CH21-B	**CH21-A**	**CH21-B**	TS11
CH24-A	CH24-B	**CH24-A**	**CH24-B**	CH23-A	CH23-B	**CH23-A**	**CH23-B**	TS12

Note: In D4 format, TS1–TS12 contain signaling data for two frames. Bold type indicates data for second frame.

16.2.2 Software Signaling Insertion-Enable Registers, E1 CAS Mode

In E1 CAS mode, the CAS signaling alignment/alarm byte can be sourced from the transmit signaling registers along with the signaling data.

Register Name: **SSIE1**
Register Description: **Software Signaling Insertion Enable 1**
Register Address: **08h**

Bit #	7	6	5	4	3	2	1	0
Name	CH7	CH6	CH5	CH4	CH3	CH2	CH1	UCAW
Default	0	0	0	0	0	0	0	0

Bit 0/Upper CAS Align/Alarm Word (UCAW). Selects the upper CAS align/alarm pattern (0000) to be sourced from the upper 4 bits of the TS1 register.

0 = do not source the upper CAS align/alarm pattern from the TS1 register
1 = source the upper CAS align/alarm pattern from the TS1 register

Bits 1 to 7/Software Signaling-Insertion Enable for Channels 1 to 7 (CH1 to CH7). These bits determine which channels are to have signaling inserted from the transmit signaling registers.

0 = do not source signaling data from the TSx registers for this channel
1 = source signaling data from the TSx registers for this channel

Register Name: **SSIE2**
Register Description: **Software Signaling Insertion Enable 2**
Register Address: **09h**

Bit #	7	6	5	4	3	2	1	0
Name	CH15	CH14	CH13	CH12	CH11	CH10	CH9	CH8
Default	0	0	0	0	0	0	0	0

Bits 0 to 7/Software Signaling Insertion Enable for Channels 8 to 15 (CH8 to CH15). These bits determine which channels are to have signaling inserted from the transmit signaling registers.

0 = do not source signaling data from the TSx registers for this channel
1 = source signaling data from the TSx registers for this channel

Register Name: **SSIE3**
Register Description: **Software Signaling Insertion Enable 3**
Register Address: **0Ah**

Bit #	7	6	5	4	3	2	1	0
Name	CH22	CH21	CH20	CH19	CH18	CH17	CH16	LCAW
Default	0	0	0	0	0	0	0	0

Bit 0/Lower CAS Align/Alarm Word (LCAW). Selects the lower CAS align/alarm bits (xyxx) to be sourced from the lower 4 bits of the TS1 register.

0 = do not source the lower CAS align/alarm bits from the TS1 register
1 = source the lower CAS alarm align/bits from the TS1 register

Bits 1 to 7/Software Signaling Insertion Enable for LCAW and Channels 16 to 22 (CH16 to CH22). These bits determine which channels are to have signaling inserted from the transmit signaling registers.

0 = do not source signaling data from the TSx registers for this channel
1 = source signaling data from the TSx registers for this channel

Register Name: **SSIE4**
Register Description: **Software Signaling Insertion Enable 4**
Register Address: **0Bh**

Bit #	7	6	5	4	3	2	1	0
Name	CH30	CH29	CH28	CH27	CH26	CH25	CH24	CH23
Default	0	0	0	0	0	0	0	0

Bits 0 to 7/Software Signaling Insertion Enable for Channels 22 to 30 (CH23 to CH30). These bits determine which channels are to have signaling inserted from the transmit signaling registers.

0 = do not source signaling data from the TSx registers for this channel
1 = source signaling data from the TSx registers for this channel

16.2.3 Software Signaling Insertion-Enable Registers, T1 Mode

In T1 mode, only registers SSIE1–SSIE3 are used since there are only 24 channels in a T1 frame.

Register Name: **SSIE1**
Register Description: **Software Signaling Insertion Enable 1**
Register Address: **08h**

Bit #	7	6	5	4	3	2	1	0
Name	CH8	CH7	CH6	CH5	CH4	CH3	CH2	CH1
Default	0	0	0	0	0	0	0	0

Bits 0 to 7/Software Signaling Insertion Enable for Channels 1 to 8 (CH1 to CH8). These bits determine which channels are to have signaling inserted from the transmit signaling registers.

0 = do not source signaling data from the TSx registers for this channel
1 = source signaling data from the TSx registers for this channel

Register Name: **SSIE2**
Register Description: **Software Signaling-Insertion Enable 2**
Register Address: **09h**

Bit #	7	6	5	4	3	2	1	0
Name	CH16	CH15	CH14	CH13	CH12	CH11	CH10	CH9
Default	0	0	0	0	0	0	0	0

Bits 0 to 7/Software Signaling Insertion Enable for Channels 9 to 16 (CH9 to CH16). These bits determine which channels are to have signaling inserted from the transmit signaling registers.

0 = do not source signaling data from the TSx registers for this channel
1 = source signaling data from the TSx registers for this channel

Register Name: **SSIE3**
Register Description: **Software Signaling-Insertion Enable 3**
Register Address: **0Ah**

Bit #	7	6	5	4	3	2	1	0
Name	CH24	CH23	CH22	CH21	CH20	CH19	CH18	CH17
Default	0	0	0	0	0	0	0	0

Bits 0 to 7/Software Signaling Insertion Enable for Channels 17 to 24 (CH17 to CH24). These bits determine which channels are to have signaling inserted from the transmit signaling registers.

0 = do not source signaling data from the TSx registers for this channel
1 = source signaling data from the TSx registers for this channel

16.2.4 Hardware-Based Mode

In hardware-based mode, signaling data is input through the TSIG pin. This signaling PCM stream is buffered and inserted to the data stream being input at the TSER pin.

Signaling data can be inserted on a per-channel basis by the transmit hardware-signaling channel-select (THSCS) function. The user has the ability to control which channels are to have signaling data from the TSIG pin inserted into them on a per-channel basis. See Section 7 for details on using this per-channel (THSCS) feature. The signaling insertion capabilities of the framer are available whether the transmit-side elastic store is enabled or disabled. If the elastic store is enabled, the backplane clock (TSYSCLK) can be either 1.544MHz or 2.048MHz. Also, if the elastic is enabled in conjunction with transmit hardware signaling, CCR3.7 must be set = 0.

17. PER-CHANNEL IDLE CODE GENERATION

Channel data can be replaced by an idle code on a per-channel basis in the transmit and receive directions. When operated in the T1 mode, only the first 24 channels are used by the DS2155, the remaining channels, CH25–CH32, are not used.

The DS2155 contains a 64-byte idle code array accessed by the idle array address register (IAAR) and the per-channel idle code register (PCICR). The contents of the array contain the idle codes to be substituted into the appropriate transmit or receive channels. This substitution can be enabled and disabled on a per-channel basis by the transmit-channel idle code-enable registers (TCICE1–4) and receive-channel idle code-enable registers (RCICE1–4).

To program idle codes, first select a channel by writing to the IAAR register. Then write the idle code to the PCICR register. For successive writes there is no need to load the IAAR with the next consecutive address. The IAAR register automatically increments after a write to the PCICR register. The auto increment feature can be used for read operations as well. Bits 6 and 7 of the IAAR register can be used to block write a common idle code to all transmit or receive positions in the array with a single write to the PCICR register. Bits 6 and 7 of the IAAR register should not be used for read operations. TCICE1–4 and RCICE1–4 are used to enable idle code replacement on a per-channel basis.

Table 17-A. Idle-Code Array Address Mapping

BITS 0 to 5 OF IAAR REGISTER	MAPS TO CHANNEL
0	Transmit Channel 1
1	Transmit Channel 2
2	Transmit Channel 3
—	—
—	—
30	Transmit Channel 31
31	Transmit Channel 32
32	Receive Channel 1
33	Receive Channel 2
34	Receive Channel 3
—	—
—	—
62	Receive Channel 31
63	Receive Channel 32

17.1 Idle-Code Programming Examples

Example 1

Sets transmit channel 3 idle code to 7Eh.

```
Write IAAR = 02h  ;select channel 3 in the array
Write PCICR = 7Eh ;set idle code to 7Eh
```

Example 2

Sets transmit channels 3, 4, 5, and 6 idle code to 7Eh and enables transmission of idle codes for those channels.

```
Write IAAR = 02h        ;select channel 3 in the array
Write PCICR = 7Eh       ;set channel 3 idle code to 7Eh
Write PCICR = 7Eh       ;set channel 4 idle code to 7Eh
Write PCICR = 7Eh       ;set channel 5 idle code to 7Eh
Write PCICR = 7Eh       ;set channel 6 idle code to 7Eh
Write TCICE1 = 3Ch      ;enable transmission of idle codes for channels 3,4,5, and 6
```

Example 3

Sets transmit channels 3, 4, 5, and 6 idle code to 7Eh, EEh, FFh, and 7Eh, respectively.

```
Write IAAR = 02h
Write PCICR = 7Eh
Write PCICR = EEh
Write PCICR = FFh
Write PCICR = 7Eh
```

Example 4

Sets all transmit idle codes to 7Eh.

```
Write IAAR = 4xh
Write PCICR = 7Eh
```

Example 5

Sets all receive and transmit idle codes to 7Eh and enables idle code substitution in all E1 transmit and receive channels.

```
Write IAAR = Cxh    ;enable block write to all transmit and receive positions in the array
Write PCICR = 7Eh   ;7Eh is idle code
Write TCICE1 = FEh  ;enable idle code substitution for transmit channels 2 through 8
                    ;Although an idle code was programmed for channel 1 by the block write
                    ;function above, enabling it for channel 1 would step on the frame
                    ;alignment, alarms, and Sa bits
Write TCICE2 = FFh  ;enable idle code substitution for transmit channels 9 through 16
Write TCICE3 = FEh  ;enable idle code substitution for transmit channels 18 through 24
                    ;Although an idle code was programmed for channel 17 by the block write
                    ;function above, enabling it for channel 17 would step on the CAS frame
                    ;alignment, and signaling information
Write TCICE4 = FFh  ;enable idle code substitution for transmit channels 25 through 32
Write RCICE1 = FEh  ;enable idle code substitution for receive channels 2 through 8
Write RCICE2 = FFh  ;enable idle code substitution for receive channels 9 through 16
Write RCICE3 = FEh  ;enable idle code substitution for receive channels 18 through 24
Write RCICE4 = FFh  ;enable idle code substitution for receive channels 25 through 32
```

Register Name: **IAAR**
Register Description: **Idle Array Address Register**
Register Address: **7Eh**

Bit #	7	6	5	4	3	2	1	0
Name	GRIC	GTIC	IAA5	IAA4	IAA3	IAA2	IAA1	IAA0
Default	0	0	0	0	0	0	0	0

Bits 0 to 5/Channel Pointer Address Bits (IAA0 to IAA5). These bits select the channel to be programmed with the idle code defined in the PCICR register. IAA0 is the LSB of the 5-bit channel code. Channel 1 is 01h.

Bit 6/Global Transmit-Idle Code (GTIC). Setting this bit causes all transmit channels to be set to the idle code written to the PCICR register. This bit must be set = 0 for read operations. The value in bits IAA0–IAA5 must be a valid transmit channel (01h to 20h for E1 mode; 01h to 18h for T1 mode).

Bit 7/Global Receive-Idle Code (GRIC). Setting this bit causes all receive channels to be set to the idle code written to the PCICR register. This bit must be set = 0 for read operations. The value in bits IAA0–IAA5 must be a valid transmit channel (01h to 20h for E1 mode; 01h to 18h for T1 mode).

Table 17-B. GRIC and GTIC Functions

GRIC	GTIC	FUNCTION
0	0	Updates a single transmit or receive channel
0	1	Updates all transmit channels
1	0	Updates all receive channels
1	1	Updates all transmit and receive channels

Register Name: **PCICR**
Register Description: **Per-Channel Idle Code Register**
Register Address: **7Fh**

Bit #	7	6	5	4	3	2	1	0
Name	C7	C6	C5	C4	C3	C2	C1	C0
Default	0	0	0	0	0	0	0	0

Bits 0 to 7/Per-Channel Idle-Code Bits (C0 to C7). This register defines the idle code to be programmed in the channel selected by the IAAR register. C0 is the LSB of the idle code (this bit is transmitted last).

The transmit-channel idle-code enable registers (TCICE1/2/3/4) are used to determine which of the 24 T1 or 32 E1 channels from the backplane to the T1 or E1 line should be overwritten with the code placed in the per-channel code array.

Register Name: **TCICE1**
Register Description: **Transmit-Channel Idle-Code Enable Register 1**
Register Address: **80h**

Bit #	7	6	5	4	3	2	1	0
Name	CH8	CH7	CH6	CH5	CH4	CH3	CH2	CH1
Default	0	0	0	0	0	0	0	0

Bits 0 to 7/Transmit Channels 1 to 8 Code Insertion Control Bits (CH1 to CH8)
0 = do not insert data from the idle-code array into the transmit data stream
1 = insert data from the idle-code array into the transmit data stream

Register Name: **TCICE2**
Register Description: **Transmit-Channel Idle-Code Enable Register** 2
Register Address: **81h**

Bit #	7	6	5	4	3	2	1	0
Name	CH16	CH15	CH14	CH13	CH12	CH11	CH10	CH9
Default	0	0	0	0	0	0	0	0

Bits 0 to 7/Transmit Channels 9 to 16 Code Insertion Control Bits (CH9 to CH16)
0 = do not insert data from the idle-code array into the transmit data stream
1 = insert data from the idle code-array into the transmit data stream

Register Name: **TCICE3**
Register Description: **Transmit-Channel Idle-Code Enable Register 3**
Register Address: **82h**

Bit #	7	6	5	4	3	2	1	0
Name	CH24	CH23	CH22	CH21	CH20	CH19	CH18	CH17
Default	0	0	0	0	0	0	0	0

Bits 0 to 7/Transmit Channels 17 to 24 Code Insertion Control Bits (CH17 to CH24)
0 = do not insert data from the idle-code array into the transmit data stream
1 = insert data from the idle code-array into the transmit data stream

Register Name: **TCICE4**
Register Description: **Transmit-Channel Idle-Code Enable Register 4**
Register Address: **83h**

Bit #	7	6	5	4	3	2	1	0
Name	CH32	CH31	CH30	CH29	CH28	CH27	CH26	CH25
Default	0	0	0	0	0	0	0	0

Bits 0 to 7/Transmit Channels 25 to 32 Code Insertion Control Bits (CH25 to CH32)
0 = do not insert data from the idle-code array into the transmit data stream
1 = insert data from the idle-code array into the transmit data stream

The receive-channel idle-code enable registers (RCICE1/2/3/4) are used to determine which of the 24 T1 or 32 E1 channels from the backplane to the T1 or E1 line should be overwritten with the code placed in the per-channel code array.

Register Name: **RCICE1**
Register Description: **Receive-Channel Idle-Code Enable Register 1**
Register Address: **84h**

Bit #	7	6	5	4	3	2	1	0
Name	CH8	CH7	CH6	CH5	CH4	CH3	CH2	CH1
Default	0	0	0	0	0	0	0	0

Bits 0 to 7/Receive Channels 1 to 8 Code Insertion Control Bits (CH1 to CH8)

0 = do not insert data from the idle-code array into the receive data stream
1 = insert data from the idle-code array into the receive data stream

Register Name: **RCICE2**
Register Description: **Receive-Channel Idle-Code Enable Register 2**
Register Address: **85h**

Bit #	7	6	5	4	3	2	1	0
Name	CH16	CH15	CH14	CH13	CH12	CH11	CH10	CH9
Default	0	0	0	0	0	0	0	0

Bits 0 to 7/Receive Channels 9 to 16 Code Insertion Control Bits (CH9 to CH16)

0 = do not insert data from the idle-code array into the receive data stream
1 = insert data from the idle-code array into the receive data stream

Register Name: **RCICE3**
Register Description: **Receive-Channel Idle-Code Enable Register 3**
Register Address: **86h**

Bit #	7	6	5	4	3	2	1	0
Name	CH24	CH23	CH22	CH21	CH20	CH19	CH18	CH17
Default	0	0	0	0	0	0	0	0

Bits 0 to 7/Receive Channels 17 to 24 Code Insertion Control Bits (CH17 to CH24)

0 = do not insert data from the idle-code array into the receive data stream
1 = insert data from the idle-code array into the receive data stream

Register Name: **RCICE4**
Register Description: **Receive-Channel Idle-Code Enable Register 4**
Register Address: **87h**

Bit #	7	6	5	4	3	2	1	0
Name	CH32	CH31	CH30	CH29	CH28	CH27	CH26	CH25
Default	0	0	0	0	0	0	0	0

Bits 0 to 7/Receive Channels 25 to 32 Code Insertion Control Bits (CH25 to CH32)

0 = do not insert data from the idle-code array into the receive data stream
1 = insert data from the idle-code array into the receive data stream

18. CHANNEL BLOCKING REGISTERS

The receive channel blocking registers (RCBR1/RCBR2/RCBR3/RCBR4) and the transmit channel blocking registers (TCBR1/TCBR2/TCBR3/TCBR4) control RCHBLK and TCHBLK pins, respectively. The RCHBLK and TCHBLK pins are user-programmable outputs that can be forced either high or low during individual channels. These outputs can be used to block clocks to a USART or LAPD controller in ISDN-PRI applications. When the appropriate bits are set to a 1, the RCHBLK and TCHBLK pins are held high during the entire corresponding channel time. Channels 25 through 32 are ignored when the DS2155 is operated in the T1 mode.

Register Name: **RCBR1**
Register Description: **Receive Channel Blocking Register 1**
Register Address: **88h**

Bit #	7	6	5	4	3	2	1	0
Name	CH8	CH7	CH6	CH5	CH4	CH3	CH2	CH1
Default	0	0	0	0	0	0	0	0

Bits 0 to 7/Receive Channels 1 to 8 Channel Blocking Control Bits (CH1 to CH8)

0 = force the RCHBLK pin to remain low during this channel time
1 = force the RCHBLK pin high during this channel time

Register Name: **RCBR2**
Register Description: **Receive Channel Blocking Register 2**
Register Address: **89h**

Bit #	7	6	5	4	3	2	1	0
Name	CH16	CH15	CH14	CH13	CH12	CH11	CH10	CH9
Default	0	0	0	0	0	0	0	0

Bits 0 to 7/Receive Channels 9 to 16 Channel Blocking Control Bits (CH9 to CH16)

0 = force the RCHBLK pin to remain low during this channel time
1 = force the RCHBLK pin high during this channel time

Register Name: **RCBR3**
Register Description: **Receive Channel Blocking Register 3**
Register Address: **8Ah**

Bit #	7	6	5	4	3	2	1	0
Name	CH24	CH23	CH22	CH21	CH20	CH19	CH18	CH17
Default	0	0	0	0	0	0	0	0

Bits 0 to 7/Receive Channels 17 to 24 Channel Blocking Control Bits (CH17 to CH24)

0 = force the RCHBLK pin to remain low during this channel time
1 = force the RCHBLK pin high during this channel time

Register Name: **RCBR4**
Register Description: **Receive Channel Blocking Register 4**
Register Address: **8Bh**

Bit #	7	6	5	4	3	2	1	0
Name	CH32	CH31	CH30	CH29	CH28	CH27	CH26	CH25
Default	0	0	0	0	0	0	0	0

Bits 0 to 7/Receive Channels 25 to 32 Channel Blocking Control Bits (CH25 to CH32)

0 = force the RCHBLK pin to remain low during this channel time
1 = force the RCHBLK pin high during this channel time

Register Name: **TCBR1**
Register Description: **Transmit Channel Blocking Register 1**
Register Address: **8Ch**

Bit #	7	6	5	4	3	2	1	0
Name	CH8	CH7	CH6	CH5	CH4	CH3	CH2	CH1
Default	0	0	0	0	0	0	0	0

Bits 0 to 7/Transmit Channels 1 to 8 Channel Blocking Control Bits (CH1 to CH8)
0 = force the TCHBLK pin to remain low during this channel time
1 = force the TCHBLK pin high during this channel time

Register Name: **TCBR2**
Register Description: **Transmit Channel Blocking Register 2**
Register Address: **8Dh**

Bit #	7	6	5	4	3	2	1	0
Name	CH16	CH15	CH14	CH13	CH12	CH11	CH10	CH9
Default	0	0	0	0	0	0	0	0

Bits 0 to 7/Transmit Channels 9 to 16 Channel Blocking Control Bits (CH9 to CH16)
0 = force the TCHBLK pin to remain low during this channel time
1 = force the TCHBLK pin high during this channel time

Register Name: **TCBR3**
Register Description: **Transmit Channel Blocking Register 3**
Register Address: **8Eh**

Bit #	7	6	5	4	3	2	1	0
Name	CH24	CH23	CH22	CH21	CH20	CH19	CH18	CH17
Default	0	0	0	0	0	0	0	0

Bits 0 to 7/Transmit Channels 17 to 24 Channel Blocking Control Bits (CH17 to CH24)
0 = force the TCHBLK pin to remain low during this channel time
1 = force the TCHBLK pin high during this channel time

Register Name: **TCBR4**
Register Description: **Transmit Channel Blocking Register 4**
Register Address: **8Fh**

Bit #	7	6	5	4	3	2	1	0
Name	CH32	CH31	CH30	CH29	CH28	CH27	CH26	CH25
Default	0	0	0	0	0	0	0	0

Bits 0 to 7/Transmit Channels 25 to 32 Channel Blocking Control Bits (CH25 to CH32)
0 = force the TCHBLK pin to remain low during this channel time
1 = force the TCHBLK pin high during this channel time

19. ELASTIC STORES OPERATION

The DS2155 contains dual two-frame elastic stores, one for the receive direction and one for the transmit direction. Both elastic stores are fully independent. The transmit and receive-side elastic stores can be enabled/disabled independently of each other. Also, each elastic store can interface to either a 1.544MHz or 2.048MHz/4.096MHz/8.192MHz/16.384MHz backplane without regard to the backplane rate the other elastic store is interfacing to.

The elastic stores have two main purposes. Firstly, they can be used for rate conversion. When the DS2155 is in the T1 mode, the elastic stores can rate-convert the T1 data stream to a 2.048MHz backplane. In E1 mode, the elastic store can rate-convert the E1 data stream to a 1.544MHz backplane. Secondly, they can be used to absorb the differences in frequency and phase between the T1 or E1 data stream and an asynchronous (i.e., not locked) backplane clock, which can be 1.544MHz or 2.048MHz. In this mode, the elastic stores manage the rate difference and perform controlled slips, deleting or repeating frames of data in order to manage the difference between the network and the backplane.

The elastic stores can also be used to multiplex T1 or E1 data streams into higher backplane rates, which is the IBO discussed in Section 28.

Register Name: **ESCR**
Register Description: **Elastic Store Control Register**
Register Address: **4Fh**

Bit #	7	6	5	4	3	2	1	0
Name	TESALGN	TESR	TESMDM	TESE	RESALGN	RESR	RESMDM	RESE
Default	0	0	0	0	0	0	0	0

Bit 0/Receive Elastic Store Enable (RESE)
0 = elastic store is bypassed
1 = elastic store is enabled

Bit 1/Receive Elastic Store Minimum-Delay Mode (RESMDM). See Section 19.4 for details.
0 = elastic stores operate at full two-frame depth
1 = elastic stores operate at 32-bit depth

Bit 2/Receive Elastic Store Reset (RESR). Setting this bit from a 0 to a 1 forces the read and write pointers into opposite frames, maximizing the delay through the receive elastic store. It should be toggled after RSYSCLK has been applied and is stable. See Section 19.3 for details. Do not leave this bit set HIGH.

Bit 3/Receive Elastic Store Align (RESALGN). Setting this bit from a 0 to a 1 forces the receive elastic store's write/read pointers to a minimum separation of half a frame. No action is taken if the pointer separation is already greater or equal to half a frame. If pointer separation is less than half a frame, the command is executed and the data is disrupted. It should be toggled after RSYSCLK has been applied and is stable. Must be cleared and set again for a subsequent align. See Section 19.3 for details.

Bit 4/Transmit Elastic Store Enable (TESE)
0 = elastic store is bypassed
1 = elastic store is enabled

Bit 5/Transmit Elastic Store Minimum-Delay Mode (TESMDM). See Section 19.4 for details.
0 = elastic stores operate at full two-frame depth
1 = elastic stores operate at 32-bit depth

Bit 6/Transmit Elastic Store Reset (TESR). Setting this bit from a 0 to a 1 forces the read and write pointers into opposite frames, maximizing the delay through the transmit elastic store. Transmit data is lost during the reset. It should be toggled after TSYSCLK has been applied and is stable. See Section 19.3 for details. Do not leave this bit set HIGH.

Bit 7/Transmit Elastic Store Align (TESALGN). Setting this bit from a 0 to a 1 forces the transmit elastic store's write/read pointers to a minimum separation of half a frame. No action is taken if the pointer separation is already greater or equal to half a frame. If pointer separation is less than half a frame, the command is executed and the data is disrupted. It should be toggled after TSYSCLK has been applied and is stable. It must be cleared and set again for a subsequent align. See Section 19.3 for details.

Register Name: **SR5**
Register Description: **Status Register 5**
Register Address: **1Eh**

Bit #	7	6	5	4	3	2	1	0
Name	—	—	TESF	TESEM	TSLIP	RESF	RESEM	RSLIP
Default	0	0	0	0	0	0	0	0

Bit 0/Receive Elastic Store Slip-Occurrence Event (RSLIP). Set when the receive elastic store has either repeated or deleted a frame.

Bit 1/Receive Elastic Store Empty Event (RESEM). Set when the receive elastic store buffer empties and a frame is repeated.

Bit 2/Receive Elastic Store Full Event (RESF). Set when the receive elastic store buffer fills and a frame is deleted.

Bit 3/Transmit Elastic Store Slip-Occurrence Event (TSLIP). Set when the transmit elastic store has either repeated or deleted a frame.

Bit 4/Transmit Elastic Store Empty Event (TESEM). Set when the transmit elastic store buffer empties and a frame is repeated.

Bit 5/Transmit Elastic Store Full Event (TESF). Set when the transmit elastic store buffer fills and a frame is deleted.

Register Name: **IMR5**
Register Description: **Interrupt Mask Register 5**
Register Address: **1Fh**

Bit #	7	6	5	4	3	2	1	0
Name	—	—	TESF	TESEM	TSLIP	RESF	RESEM	RSLIP
Default	0	0	0	0	0	0	0	0

Bit 0/Receive Elastic Store Slip-Occurrence Event (RSLIP)
0 = interrupt masked
1 = interrupt enabled

Bit 1/Receive Elastic Store Empty Event (RESEM)
0 = interrupt masked
1 = interrupt enabled

Bit 2/Receive Elastic Store Full Event (RESF)
0 = interrupt masked
1 = interrupt enabled

Bit 3/Transmit Elastic Store Slip-Occurrence Event (TSLIP)
0 = interrupt masked
1 = interrupt enabled

Bit 4/Transmit Elastic Store Empty Event (TESEM)
0 = interrupt masked
1 = interrupt enabled

Bit 5/Transmit Elastic Store Full Event (TESF)
0 = interrupt masked
1 = interrupt enabled

19.1 Receive Side

See the IOCR1 and IOCR2 registers for information about clock and I/O configurations.

If the receive-side elastic store is enabled, then the user must provide either a 1.544MHz or 2.048MHz clock at the RSYSCLK pin. For higher rate system clock applications, see the *Interleaved PCM Bus Operation* in Section 28. The user has the option of either providing a frame/multiframe sync at the RSYNC pin or having the RSYNC pin provide a pulse on frame/multiframe boundaries. If signaling reinsertion is enabled, signaling data in TS16 is realigned to the multiframe sync input on RSYNC. Otherwise, a multiframe sync input on RSYNC is treated as a simple frame boundary by the elastic store. The framer always indicates frame boundaries on the network side of the elastic store by the RFSYNC output, whether the elastic store is enabled or not. Multiframe boundaries are always indicated by the RMSYNC output. If the elastic store is enabled, then RMSYNC outputs the multiframe boundary on the backplane side of the elastic store.

19.1.1 T1 Mode

If the user selects to apply a 2.048MHz clock to the RSYSCLK pin, then the data output at RSER is forced to all 1s every fourth channel and the F-bit is passed into the MSB of TS0. Hence, channels 1 (bits 1–7), 5, 9, 13, 17, 21, 25, and 29 [time slots 0 (bits 1–7), 4, 8, 12, 16, 20, 24, and 28] are forced to a 1. Also, in 2.048MHz applications, the RCHBLK output is forced high during the same channels as the RSER pin. This is useful in T1-to-E1 conversion applications. If the two-frame elastic buffer either fills or empties, a controlled slip occurs. If the buffer empties, then a full frame of data is repeated at RSER, and the SR5.0 and SR5.1 bits are set to a 1. If the buffer fills, then a full frame of data is deleted, and the SR5.0 and SR5.2 bits are set to a 1.

19.1.2 E1 Mode

If the elastic store is enabled, then either CAS or CRC4 multiframe boundaries are indicated through the RMSYNC output. If the user selects to apply a 1.544MHz clock to the RSYSCLK pin, then every fourth channel of the received E1 data is deleted and an F-bit position, which is forced to 1, is inserted. Hence, channels 1, 5, 9, 13, 17, 21, 25, and 29 (time slots 0, 4, 8, 12, 16, 20, 24, and 28) are deleted from the received E1 data stream. Also, in 1.544MHz applications, the RCHBLK output is not active in channels 25 through 32 (i.e., RCBR4 is not active). If the two-frame elastic buffer either fills or empties, a controlled slip occurs. If the buffer empties, then a full frame of data is repeated at RSER, and the SR5.0 and SR5.1 bits are set to a 1. If the buffer fills, then a full frame of data is deleted, and the SR5.0 and SR5.2 bits are set to a 1.

19.2 Transmit Side

See the IOCR1 and IOCR2 registers for information about clock and I/O configurations.

The operation of the transmit elastic store is very similar to the receive side. If the transmit-side elastic store is enabled, a 1.544MHz or 2.048MHz clock can be applied to the TSYSCLK input. For higher rate system clock applications, see *Interleaved PCM Bus Operation* in Section 28. Controlled slips in the transmit elastic store are reported in the SR5.3 bit, and the direction of the slip is reported in the SR5.4 and SR5.5 bits. If hardware signaling insertion is not enabled, CCR3.7 should be set = 1.

19.2.1 T1 Mode

If the user selects to apply a 2.048MHz clock to the TSYSCLK pin, then the data input at TSER is ignored every fourth channel. Therefore channels 1, 5, 9, 13, 17, 21, 25, and 29 (time slots 0, 4, 8, 12, 16, 20, 24, and 28) are ignored. The user can supply frame or multiframe sync pulse to the TSSYNC input. Also, in 2.048MHz applications, the TCHBLK output is forced high during the channels ignored by the framer.

19.2.2 E1 Mode

A 1.544MHz or 2.048MHz clock can be applied to the TSYSCLK input. The user must supply a frame sync pulse or a multiframe sync pulse to the TSSYNC input.

19.3 Elastic Stores Initialization

There are two elastic store initializations that can be used to improve performance in certain applications, elastic store reset and elastic store align. Both of these involve the manipulation of the elastic store's read and write pointers and are useful primarily in synchronous applications (RSYSCLK/TSYSCLK are locked to RCLK/TCLK, respectively) (Table 19-A).

Table 19-A. Elastic Store Delay After Initialization

INITIALIZATION	REGISTER BIT	DELAY
Receive Elastic Store Reset	ESCR.2	8 Clocks < Delay < 1 Frame
Transmit Elastic Store Reset	ESCR.6	1 Frame < Delay < 2 Frames
Receive Elastic Store Align	ESCR.3	½ Frame < Delay < 1 ½ Frames
Transmit Elastic Store Align	ESCR.7	½ Frame < Delay < 1 ½ Frames

19.4 Minimum Delay Mode

Elastic store minimum delay mode can be used when the elastic store's system clock is locked to its network clock (i.e., RCLK locked to RSYSCLK for the receive side and TCLK locked to TSYSCLK for the transmit side). ESCR.5 and ESCR.1 enable the transmit and receive elastic store minimum delay modes. When enabled, the elastic stores are forced to a maximum depth of 32 bits instead of the normal two-frame depth. This feature is useful primarily in applications that interface to a 2.048MHz bus. Certain restrictions apply when minimum delay mode is used. In addition to the restriction mentioned above, RSYNC must be configured as an output when the receive elastic store is in minimum delay mode; TSYNC must be configured as an output when transmit minimum delay mode is enabled. In a typical application, RSYSCLK and TSYSCLK are locked to RCLK, and RSYNC (frame output mode) is connected to TSSYNC (frame input mode). All of the slip contention logic in the framer is disabled (since slips cannot occur). On power-up, after the RSYSCLK and TSYSCLK signals have locked to their respective network clock signals, the elastic store reset bits (ESCR.2 and ESCR.6) should be toggled from a 0 to a 1 to ensure proper operation.

20. G.706 INTERMEDIATE CRC-4 UPDATING (E1 MODE ONLY)

The DS2155 can implement the G.706 CRC-4 recalculation at intermediate path points. When this mode is enabled, the data stream presented at TSER already has the FAS/NFAS, CRC multiframe alignment word, and CRC-4 checksum in time slot 0. The user can modify the Sa bit positions. This change in data content is used to modify the CRC-4 checksum. This modification, however, does not corrupt any error information the original CRC-4 checksum may contain. In this mode of operation, TSYNC must be configured to multiframe mode. The data at TSER must be aligned to the TSYNC signal. If TSYNC is an input, then the user must assert TSYNC aligned at the beginning of the multiframe relative to TSER. If TSYNC is an output, the user must multiframe-align the data presented to TSER.

Figure 20-1. CRC-4 Recalculate Method

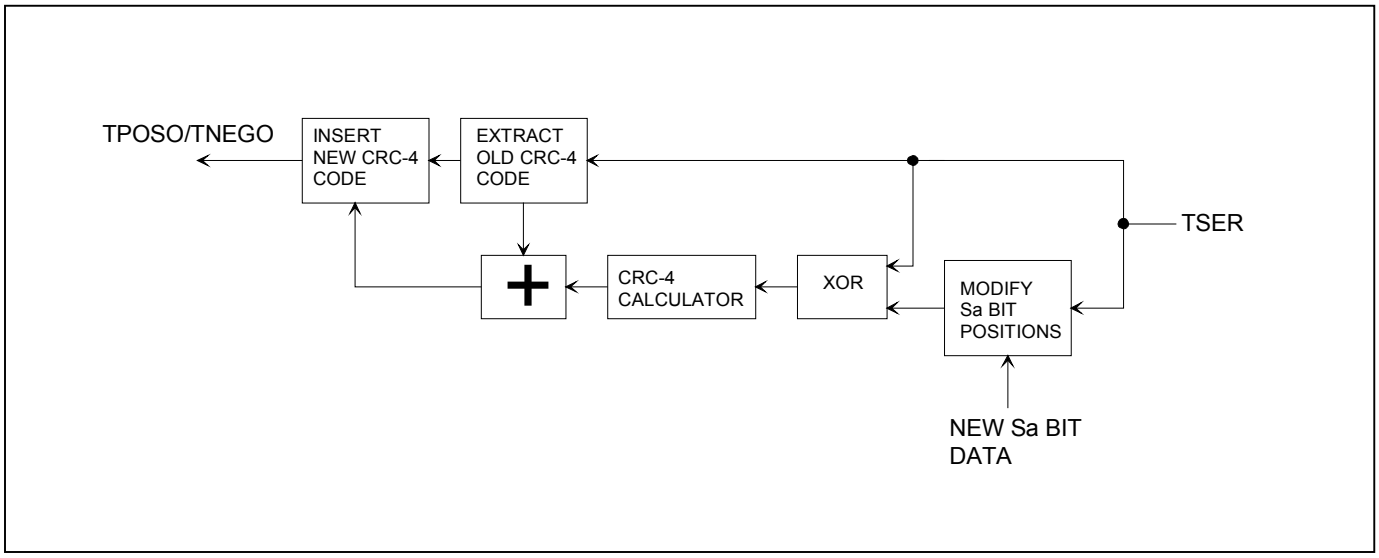

21. T1 BIT-ORIENTED CODE (BOC) CONTROLLER

The DS2155 contains a BOC generator on the transmit side and a BOC detector on the receive side. The BOC function is available only in T1 mode.

21.1 Transmit BOC

Bits 0 to 5 in the TFDL register contain the BOC message to be transmitted. Setting BOCC.0 = 1 causes the transmit BOC controller to immediately begin inserting the BOC sequence into the FDL bit position. The transmit BOC controller automatically provides the abort sequence. BOC messages are transmitted as long as BOCC.0 is set.

Transmit a BOC

1) Write 6-bit code into the TFDL register.
2) Set the SBOC bit in BOCC = 1.

21.2 Receive BOC

The receive BOC function is enabled by setting BOCC.4 = 1. The RFDL register now operates as the receive BOC message and information register. The lower six bits of the RFDL register (BOC message bits) are preset to all 1s. When the BOC bits change state, the BOC change-of-state indicator, SR8.0, alerts the host. The host then reads the RFDL register to get the BOC status and message. A change-of-state occurs when either a new BOC code has been present for a time determined by the receive BOC filter bits RBF0 and RBF1 in the BOCC register, or a nonvalid code is being received.

Receive a BOC

1) Set integration time through BOCC.1 and BOCC.2.
2) Enable the receive BOC function (BOCC.4 = 1).
3) Enable interrupt (IMR8.0 = 1).
4) Wait for interrupt to occur.
5) Read the RFDL register.
6) If SR2.7 = 1, then a valid BOC message was received.
    - The lower six bits of the RFDL register comprise the message.

Register Name: **BOCC**
Register Description: **BOC Control Register**
Register Address: **37h**

Bit #	7	6	5	4	3	2	1	0
Name	—	—	—	RBOCE	RBR	RBF1	RBF0	SBOC
Default	0	0	0	0	0	0	0	0

Bit 0/Send BOC (SBOC). Set = 1 to transmit the BOC code placed in bits 0 to 5 of the TFDL register.

Bits 1 and 2/Receive BOC Filter Bits (RBF0, RBF1). The BOC filter sets the number of consecutive patterns that must be received without error prior to an indication of a valid message.

RBF1	RBF0	Consecutive BOC Codes for Valid Sequence Identification
0	0	None
0	1	3
1	0	5
1	1	7

Bit 3/Receive BOC Reset (RBR). A 0-to-1 transition resets the BOC circuitry. Must be cleared and set again for a subsequent reset.

Bit 4/Receive BOC Enable (RBOCE). Enables the receive BOC function. The RFDL register reports the received BOC code and two information bits when this bit is set.

0 = receive BOC function disabled
1 = receive BOC function enabled; the RFDL register reports BOC messages and information

Bits 5 to 7/Unused, must be set to 0 for proper operation

Register Name: **RFDL**
Register Description: **Receive FDL Register**
Register Address: **C0h**

Bit #	7	6	5	4	3	2	1	0
Name	—	—	RBOC5	RBOC4	RBOC3	RBOC2	RBOC1	RBOC0
Default	0	0	0	0	0	0	0	0

RFDL register bit definitions when BOCC.4 = 1:

Bit 0/BOC Bit 0 (RBOC0)

Bit 1/BOC Bit 1 (RBOC1)

Bit 2/BOC Bit 2 (RBOC2)

Bit 3/BOC Bit 3 (RBOC3)

Bit 4/BOC Bit 4 (RBOC4)

Bit 5/BOC Bit 5 (RBOC5)

Bits 6, 7/This bit position is unused when BOCC.4 = 1.

Register Name: **SR8**
Register Description: **Status Register 8**
Register Address: **24h**

Bit #	7	6	5	4	3	2	1	0
Name	—	—	BOCC	RFDLAD	RFDLF	TFDLE	RMTCH	RBOC
Default	0	0	0	0	0	0	0	0

Bit 0/Receive BOC Detector Change-of-State Event (RBOC). Set whenever the BOC detector sees a change of state to a valid BOC. The setting of this bit prompts the user to read the RFDL register.

Bit 1/Receive FDL Match Event (RMTCH). Set whenever the contents of the RFDL register matches RFDLM1 or RFDLM2.

Bit 2/TFDL Register Empty Event (TFDLE). Set when the transmit FDL buffer (TFDL) empties.

Bit 3/RFDL Register Full Event (RFDLF). Set when the receive FDL buffer (RFDL) fills to capacity.

Bit 4/RFDL Abort Detect Event (RFDLAD). Set when eight consecutive 1s are received on the FDL.

Bit 5/BOC Clear Event (BOCC). Set when 30 FDL bits occur without an abort sequence.

Register Name: **IMR8**
Register Description: **Interrupt Mask Register 8**
Register Address: **25h**

Bit #	7	6	5	4	3	2	1	0
Name	—	—	BOCC	RFDLAD	RFDLF	TFDLE	RMTCH	RBOC
Default	0	0	0	0	0	0	0	0

Bit 0/Receive BOC Detector Change-of-State Event (RBOC)
0 = interrupt masked
1 = interrupt enabled

Bit 1/Receive FDL Match Event (RMTCH)
0 = interrupt masked
1 = interrupt enabled

Bit 2/TFDL Register Empty Event (TFDLE)
0 = interrupt masked
1 = interrupt enabled

Bit 3/RFDL Register Full Event (RFDLF)
0 = interrupt masked
1 = interrupt enabled

Bit 4/RFDL Abort Detect Event (RFDLAD)
0 = interrupt masked
1 = interrupt enabled

Bit 5/BOC Clear Event (BOCC)
0 = interrupt masked
1 = interrupt enabled

22. ADDITIONAL (SA) AND INTERNATIONAL (SI) BIT OPERATION (E1 ONLY)

When operated in the E1 mode, the DS2155 provides three methods for accessing the Sa and the Si bits. The first method involves a hardware scheme that uses the RLINK/RLCLK and TLINK/TLCLK pins (Section 22.1). The second method involves using the internal RAF/RNAF and TAF/TNAF registers (Section 22.2). The third method, which is covered in Section 22.3, involves an expanded version of the second method.

22.1 Method 1: Hardware Scheme

On the receive side, all of the received data is reported at the RLINK pin. Using the E1RCR2 register, the user can control the RLCLK pin to pulse during any combination of Sa bits. This allows the user to create a clock that can be used to capture the needed Sa bits. If RSYNC is programmed to output a frame boundary, it identifies the Si bits.

On the transmit side, the individual Sa bits can be either sourced from the internal TNAF register (Section 22.2) or externally from the TLINK pin. Using the E1TCR2 register, the framer can be programmed to source any combination of the Sa bits from the TLINK pin. Si bits can be sampled through the TSER pin if by setting E1TCR1.4 = 0.

22.2 Method 2: Internal Register Scheme Based on Double-Frame

On the receive side, the RAF and RNAF registers always report the data as it received in the Sa and Si bit locations. The RAF and RNAF registers are updated on align-frame boundaries. The setting of the receive align frame bit in Status Register 4 (SR4.0) indicates that the contents of the RAF and RNAF have been updated. The host can use the SR4.0 bit to know when to read the RAF and RNAF registers. The host has 250µs to retrieve the data before it is lost.

On the transmit side, data is sampled from the TAF and TNAF registers with the setting of the transmit align frame bit in Status Register 4 (SR4.3). The host can use the SR4.3 bit to know when to update the TAF and TNAF registers. It has 250µs to update the data or else the old data is retransmitted**. If the TAF and TNAF registers are only being used to source the align frame and nonalign frame-sync patterns, then the host need only write once to these registers**. Data in the Si bit position is overwritten if either the framer is (1) programmed to source the Si bits from the TSER pin, (2) in the CRC4 mode, or (3) has automatic E-bit insertion enabled. Data in the Sa bit position is overwritten if any of the E1TCR2.3 to E1TCR2.7 bits are set to 1.

Register Name: **RAF**
Register Description: **Receive Align Frame Register**
Register Address: **C6h**

Bit #	7	6	5	4	3	2	1	0
Name	Si	0	0	1	1	0	1	1
Default	0	0	0	0	0	0	0	0

Bit 0/Frame Alignment Signal Bit (1)

Bit 1/Frame Alignment Signal Bit (1)

Bit 2/Frame Alignment Signal Bit (0)

Bit 3/Frame Alignment Signal Bit (1)

Bit 4/Frame Alignment Signal Bit (1)

Bit 5/Frame Alignment Signal Bit (0)

Bit 6/Frame Alignment Signal Bit (0)

Bit 7/International Bit (Si)

Register Name: **RNAF**
Register Description: **Receive Nonalign Frame Register**
Register Address: **C7h**

Bit #	7	6	5	4	3	2	1	0
Name	Si	1	A	Sa4	Sa5	Sa6	Sa7	Sa8
Default	0	0	0	0	0	0	0	0

Bit 0/Additional Bit 8 (Sa8)

Bit 1/Additional Bit 7 (Sa7)

Bit 2/Additional Bit 6 (Sa6)

Bit 3/Additional Bit 5 (Sa5)

Bit 4/Additional Bit 4 (Sa4)

Bit 5/Remote Alarm (A)

Bit 6/Frame Nonalignment Signal Bit (1)

Bit 7/International Bit (Si)

Register Name: **TAF**
Register Description: **Transmit Align Frame Register**
Register Address: **D0h**

Bit #	7	6	5	4	3	2	1	0
Name	Si	0	0	1	1	0	1	1
Default	0	0	0	1	1	0	1	1

Bit 0/Frame Alignment Signal Bit (1)

Bit 1/Frame Alignment Signal Bit (1)

Bit 2/Frame Alignment Signal Bit (0)

Bit 3/Frame Alignment Signal Bit (1)

Bit 4/Frame Alignment Signal Bit (1)

Bit 5/Frame Alignment Signal Bit (0)

Bit 6/Frame Alignment Signal Bit (0)

Bit 7/International Bit (Si)

Register Name: **TNAF**
Register Description: **Transmit Nonalign Frame Register**
Register Address: **D1h**

Bit #	7	6	5	4	3	2	1	0
Name	Si	1	A	Sa4	Sa5	Sa6	Sa7	Sa8
Default	0	1	0	0	0	0	0	0

Bit 0/Additional Bit 8 (Sa8)

Bit 1/Additional Bit 7 (Sa7)

Bit 2/Additional Bit 6 (Sa6)

Bit 3/Additional Bit 5 (Sa5)

Bit 4/Additional Bit 4 (Sa4)

Bit 5/Remote Alarm [used to transmit the alarm (A)]

Bit 6/Frame Nonalignment Signal Bit (1)

Bit 7/International Bit (Si)

22.3 Method 3: Internal Register Scheme Based on CRC4 Multiframe

The receive side contains a set of eight registers (RSiAF, RSiNAF, RRA, and RSa4–RSa8) that report the Si and Sa bits as they are received. These registers are updated with the setting of the receive CRC4 multiframe bit in Status Register 2 (SR4.1). The host can use the SR4.1 bit to know when to read these registers. The user has 2ms to retrieve the data before it is lost. The MSB of each register is the first received. See the following register descriptions for more details.

The transmit side also contains a set of eight registers (TSiAF, TSiNAF, TRA, and TSa4–TSa8) that, through the transmit Sa bit control register (TSaCR), can be programmed to insert Si and Sa data. Data is sampled from these registers with the setting of the transmit multiframe bit in Status Register 2 (SR4.4). The host can use the SR4.4 bit to know when to update these registers. It has 2ms to update the data or else the old data is retransmitted. The MSB of each register is the first bit transmitted. See the following register descriptions for more details.

Register Name: **RSiAF**
Register Description: **Received Si Bits of the Align Frame**
Register Address: **C8h**

Bit #	7	6	5	4	3	2	1	0
Name	SiF0	SiF2	SiF4	SiF6	SiF8	SiF10	SiF12	SiF14
Default	0	0	0	0	0	0	0	0

Bit 0/Si Bit of Frame 14 (SiF14)

Bit 1/Si Bit of Frame 12 (SiF12)

Bit 2/Si Bit of Frame 10 (SiF10)

Bit 3/Si Bit of Frame 8 (SiF8)

Bit 4/Si Bit of Frame 6 (SiF6)

Bit 5/Si Bit of Frame 4 (SiF4)

Bit 6/Si Bit of Frame 2 (SiF2)

Bit 7/Si Bit of Frame 0 (SiF0)

Register Name: **RSiNAF**
Register Description: **Received Si Bits of the Nonalign Frame**
Register Address: **C9h**

Bit #	7	6	5	4	3	2	1	0
Name	SiF1	SiF3	SiF5	SiF7	SiF9	SiF11	SiF13	SiF15
Default	0	0	0	0	0	0	0	0

Bit 0/Si Bit of Frame 15 (SiF15)

Bit 1/Si Bit of Frame 13 (SiF13)

Bit 2/Si Bit of Frame 11 (SiF11)

Bit 3/Si Bit of Frame 9 (SiF9)

Bit 4/Si Bit of Frame 7 (SiF7)

Bit 5/Si Bit of Frame 5 (SiF5)

Bit 6/Si Bit of Frame 3 (SiF3)

Bit 7/Si Bit of Frame 1 (SiF1)

Register Name: **RRA**
Register Description: **Received Remote Alarm**
Register Address: **Cah**

Bit #	7	6	5	4	3	2	1	0
Name	RRAF1	RRAF3	RRAF5	RRAF7	RRAF9	RRAF11	RRAF13	RRAF15
Default	0	0	0	0	0	0	0	0

Bit 0/Remote Alarm Bit of Frame 15 (RRAF15)

Bit 1/Remote Alarm Bit of Frame 13 (RRAF13)

Bit 2/Remote Alarm Bit of Frame 11 (RRAF11)

Bit 3/Remote Alarm Bit of Frame 9 (RRAF9)

Bit 4/Remote Alarm Bit of Frame 7 (RRAF7)

Bit 5/Remote Alarm Bit of Frame 5 (RRAF5)

Bit 6/Remote Alarm Bit of Frame 3 (RRAF3)

Bit 7/Remote Alarm Bit of Frame 1 (RRAF1)

Register Name: **RSa4**
Register Description: **Received Sa4 Bits**
Register Address: **CBh**

Bit #	7	6	5	4	3	2	1	0
Name	RSa4F1	RSa4F3	RSa4F5	RSa4F7	RSa4F9	RSa4F11	RSa4F13	RSa4F15
Default	0	0	0	0	0	0	0	0

Bit 0/Sa4 Bit of Frame 15 (RSa4F15)

Bit 1/Sa4 Bit of Frame 13 (RSa4F13)

Bit 2/Sa4 Bit of Frame 11 (RSa4F11)

Bit 3/Sa4 Bit of Frame 9 (RSa4F9)

Bit 4/Sa4 Bit of Frame 7 (RSa4F7)

Bit 5/Sa4 Bit of Frame 5(RSa4F5)

Bit 6/Sa4 Bit of Frame 3 (RSa4F3)

Bit 7/Sa4 Bit of Frame 1 (RSa4F1)

Register Name: **RSa5**
Register Description: **Received Sa5 Bits**
Register Address: **CCh**

Bit #	7	6	5	4	3	2	1	0
Name	RSa5F1	RSa5F3	RSa5F5	RSa5F7	RSa5F9	RSa5F11	RSa5F13	RSa5F15
Default	0	0	0	0	0	0	0	0

Bit 0/Sa5 Bit of Frame 15 (RSa5F15)

Bit 1/Sa5 Bit of Frame 13 (RSa5F13)

Bit 2/Sa5 Bit of Frame 11 (RSa5F11)

Bit 3/Sa5 Bit of Frame 9 (RSa5F9)

Bit 4/Sa5 Bit of Frame 7 (RSa5F7)

Bit 5/Sa5 Bit of Frame 5 (RSa5F5)

Bit 6/Sa5 Bit of Frame 3 (RSa5F3)

Bit 7/Sa5 Bit of Frame 1 (RSa5F1)

Register Name: **RSa6**
Register Description: **Received Sa6 Bits**
Register Address: **CDh**

Bit #	7	6	5	4	3	2	1	0
Name	RSa6F1	RSa6F3	RSa6F5	RSa6F7	RSa6F9	RSa6F11	RSa6F13	RSa6F15
Default	0	0	0	0	0	0	0	0

Bit 0/Sa6 Bit of Frame 15 (RSa6F15)

Bit 1/Sa6 Bit of Frame 13 (RSa6F13)

Bit 2/Sa6 Bit of Frame 11 (RSa6F11)

Bit 3/Sa6 Bit of Frame 9 (RSa6F9)

Bit 4/Sa6 Bit of Frame 7 (RSa6F7)

Bit 5/Sa6 Bit of Frame 5 (RSa6F5)

Bit 6/Sa6 Bit of Frame 4 (RSa6F4)

Bit 7/Sa6 Bit of Frame 3(RSa6F3)

Register Name: **RSa7**
Register Description: **Received Sa7 Bits**
Register Address: **CEh**

Bit #	7	6	5	4	3	2	1	0
Name	RSa7F1	Rsa7F3	RSa7F5	RSa7F7	RSa7F9	RSa7F11	RSa7F13	RSa7F15
Default	0	0	0	0	0	0	0	0

Bit 0/Sa7 Bit of Frame 15 (RSa7F15)

Bit 1/Sa7 Bit of Frame 13 (RSa7F13)

Bit 2/Sa7 Bit of Frame 11 (RSa7F11)

Bit 3/Sa7 Bit of Frame 9 (RSa7F9)

Bit 4/Sa7 Bit of Frame 7 (RSa7F7)

Bit 5/Sa7 Bit of Frame 5 (RSa7F5)

Bit 6/Sa7 Bit of Frame 3 (RSa7F3)

Bit 7/Sa7 Bit of Frame 1(RSa4F1)

Register Name: **RSa8**
Register Description: **Received Sa8 Bits**
Register Address: **CFh**

Bit #	7	6	5	4	3	2	1	0
Name	RSa8F1	RSa8F3	RSa8F5	RSa8F7	RSa8F9	RSa8F11	RSa8F13	RSa8F15
Default	0	0	0	0	0	0	0	0

Bit 0/Sa8 Bit of Frame 15 (RSa8F15)

Bit 1/Sa8 Bit of Frame 13 (RSa8F13)

Bit 2/Sa8 Bit of Frame 11 (RSa8F11)

Bit 3/Sa8 Bit of Frame 9 (RSa8F9)

Bit 4/Sa8 Bit of Frame 7 (RSa8F7)

Bit 5/Sa8 Bit of Frame 5 (RSa8F5)

Bit 6/Sa8 Bit of Frame 3 (RSa8F3)

Bit 7/Sa8 Bit of Frame 1 (RSa8F1)

Register Name: **TSiAF**
Register Description: **Transmit Si Bits of the Align Frame**
Register Address: **D2h**

Bit #	7	6	5	4	3	2	1	0
Name	TSiF0	TSiF2	TSiF4	TSiF6	TSiF8	TSiF10	TSiF12	TSiF14
Default	0	0	0	0	0	0	0	0

Bit 0/Si Bit of Frame 14 (TSiF14)

Bit 1/Si Bit of Frame 12 (TSiF12)

Bit 2/Si Bit of Frame 10 (TSiF10)

Bit 3/Si Bit of Frame 8 (TSiF8)

Bit 4/Si Bit of Frame 6 (TSiF6)

Bit 5/Si Bit of Frame 4 (TSiF4)

Bit 6/Si Bit of Frame 2 (TSiF2)

Bit 7/Si Bit of Frame 0 (TSiF0)

Register Name: **TSiNAF**
Register Description: **Transmit Si Bits of the Nonalign Frame**
Register Address: **D3h**

Bit #	7	6	5	4	3	2	1	0
Name	TSiF1	TSiF3	TSiF5	TSiF7	TSiF9	TSiF11	TSiF13	TSiF15
Default	0	0	0	0	0	0	0	0

Bit 0/Si Bit of Frame 15 (TSiF15)

Bit 1/Si Bit of Frame 13 (TSiF13)

Bit 2/Si Bit of Frame 11 (TSiF11)

Bit 3/Si Bit of Frame 9 (TSiF9)

Bit 4/Si Bit of Frame 7 (TSiF7)

Bit 5/Si Bit of Frame 5 (TSiF5)

Bit 6/Si Bit of Frame 3 (TSiF3)

Bit 7/Si Bit of Frame 1 (TSiF1)

Register Name: **TRA**
Register Description: **Transmit Remote Alarm**
Register Address: **D4h**

Bit #	7	6	5	4	3	2	1	0
Name	TRAF1	TRAF3	TRAF5	TRAF7	TRAF9	TRAF11	TRAF13	TRAF15
Default	0	0	0	0	0	0	0	0

Bit 0/Remote Alarm Bit of Frame 15 (TRAF15)

Bit 1/Remote Alarm Bit of Frame 13 (TRAF13)

Bit 2/Remote Alarm Bit of Frame 11 (TRAF11)

Bit 3/Remote Alarm Bit of Frame 9 (TRAF9)

Bit 4/Remote Alarm Bit of Frame 7 (TRAF7)

Bit 5/Remote Alarm Bit of Frame 5 (TRAF5)

Bit 6/Remote Alarm Bit of Frame 3 (TRAF3)

Bit 7/Remote Alarm Bit of Frame 1 (TRAF1)

Register Name: **TSa4**
Register Description: **Transmit Sa4 Bits**
Register Address: **D5h**

Bit #	7	6	5	4	3	2	1	0
Name	TSa4F1	TSa4F3	TSa4F5	TSa4F7	TSa4F9	TSa4F11	TSa4F13	TSa4F15
Default	0	0	0	0	0	0	0	0

Bit 0/Sa4 Bit of Frame 15 (TSa4F15)

Bit 1/Sa4 Bit of Frame 13 (TSa4F13)

Bit 2/Sa4 Bit of Frame 11 (TSa4F11)

Bit 3/Sa4 Bit of Frame 9 (TSa4F9)

Bit 4/Sa4 Bit of Frame 7 (TSa4F7)

Bit 5/Sa4 Bit of Frame 5 (TSa4F5)

Bit 6/Sa4 Bit of Frame 3 (TSa4F3)

Bit 7/Sa4 Bit of Frame 1 (TSa4F1)

Register Name: **TSa5**
Register Description: **Transmitted Sa5 Bits**
Register Address: **D6h**

Bit #	7	6	5	4	3	2	1	0
Name	TSa5F1	TSa5F3	TSa5F5	TSa5F7	TSa5F9	TSa5F11	TSa5F13	TSa5F15
Default	0	0	0	0	0	0	0	0

Bit 0/Sa5 Bit of Frame 15 (TSa5F15)

Bit 1/Sa5 Bit of Frame 13 (TSa5F13)

Bit 2/Sa5 Bit of Frame 11 (TSa5F11)

Bit 3/Sa5 Bit of Frame 9 (TSa5F9)

Bit 4/Sa5 Bit of Frame 7 (TSa5F7)

Bit 5/Sa5 Bit of Frame 5 (TSa5F5)

Bit 6/Sa5 Bit of Frame 3 (TSa5F3)

Bit 7/Sa5 Bit of Frame 1 (TSa5F1)

Register Name: **TSa6**
Register Description: **Transmit Sa6 Bits**
Register Address: **D7h**

Bit #	7	6	5	4	3	2	1	0
Name	TSa6F1	TSa6F3	TSa6F5	TSa6F7	TSa6F9	TSa6F11	TSa6F13	TSa6F15
Default	0	0	0	0	0	0	0	0

Bit 0/Sa6 Bit of Frame 15 (TSa6F15)

Bit 1/Sa6 Bit of Frame 13 (TSa6F13)

Bit 2/Sa6 Bit of Frame 11 (TSa6F11)

Bit 3/Sa6 Bit of Frame 9 (TSa6F9)

Bit 4/Sa6 Bit of Frame 7 (TSa6F7)

Bit 5/Sa6 Bit of Frame 5 (TSa6F5)

Bit 6/Sa6 Bit of Frame 3 (TSa6F3)

Bit 7/Sa6 Bit of Frame 1 (TSa6F1)

Register Name: **TSa7**
Register Description: **Transmit Sa7 Bits**
Register Address: **D8h**

Bit #	7	6	5	4	3	2	1	0
Name	TSa7F1	TSa7F3	TSa7F5	TSa7F7	TSa7F9	TSa7F11	TSa7F13	TSa7F15
Default	0	0	0	0	0	0	0	0

Bit 0/Sa7 Bit of Frame 15 (TSa7F15)

Bit 1/Sa7 Bit of Frame 13 (TSa7F13)

Bit 2/Sa7 Bit of Frame 11 (TSa7F11)

Bit 3/Sa7 Bit of Frame 9 (TSa7F9)

Bit 4/Sa7 Bit of Frame 7 (TSa7F7)

Bit 5/Sa7 Bit of Frame 5 (TSa7F5)

Bit 6/Sa7 Bit of Frame 3 (TSa7F3)

Bit 7/Sa7 Bit of Frame 1 (TSa4F1)

Register Name: **TSa8**
Register Description: **Transmit Sa8 Bits**
Register Address: **D9h**

Bit #	7	6	5	4	3	2	1	0
Name	TSa8F1	TSa8F3	TSa8F5	TSa8F7	TSa8F9	TSa8F11	TSa8F13	TSa8F15
Default	0	0	0	0	0	0	0	0

Bit 0/Sa8 Bit of Frame 15 (TSa8F15)

Bit 1/Sa8 Bit of Frame 13 (TSa8F13)

Bit 2/Sa8 Bit of Frame 11 (TSa8F11)

Bit 3/Sa8 Bit of Frame 9 (TSa8F9)

Bit 4/Sa8 Bit of Frame 7 (TSa8F7)

Bit 5/Sa8 Bit of Frame 5 (TSa8F5)

Bit 6/Sa8 Bit of Frame 3 (TSa8F3)

Bit 7/Sa8 Bit of Frame 1 (TSa8F1)

Register Name: **TSACR**
Register Description: **Transmit Sa Bit Control Register**
Register Address: **DAh**

Bit #	7	6	5	4	3	2	1	0
Name	SiAF	SiNAF	RA	Sa4	Sa5	Sa6	Sa7	Sa8
Default	0	0	0	0	0	0	0	0

Bit 0/Additional Bit 8 Insertion Control Bit (Sa8)
0 = do not insert data from the TSa8 register into the transmit data stream
1 = insert data from the TSa8 register into the transmit data stream

Bit 1/Additional Bit 7 Insertion Control Bit (Sa7)
0 = do not insert data from the TSa7 register into the transmit data stream
1 = insert data from the TSa7 register into the transmit data stream

Bit 2/Additional Bit 6 Insertion Control Bit (Sa6)
0 = do not insert data from the TSa6 register into the transmit data stream
1 = insert data from the TSa6 register into the transmit data stream

Bit 3/Additional Bit 5 Insertion Control Bit (Sa5)
0 = do not insert data from the TSa5 register into the transmit data stream
1 = insert data from the TSa5 register into the transmit data stream

Bit 4/Additional Bit 4 Insertion Control Bit (Sa4)
0 = do not insert data from the TSa4 register into the transmit data stream
1 = insert data from the TSa4 register into the transmit data stream

Bit 5/Remote Alarm Insertion Control Bit (RA)
0 = do not insert data from the TRA register into the transmit data stream
1 = insert data from the TRA register into the transmit data stream

Bit 6/International Bit in Nonalign Frame Insertion Control Bit (SiNAF)
0 = do not insert data from the TSiNAF register into the transmit data stream
1 = insert data from the TSiNAF register into the transmit data stream

Bit 7/International Bit in Align Frame Insertion Control Bit (SiAF)
0 = do not insert data from the TSiAF register into the transmit data stream
1 = insert data from the TSiAF register into the transmit data stream

23. HDLC CONTROLLERS

This device has two enhanced HDLC controllers, HDLC #1 and HDLC #2. Each controller is configurable for use with time slots, Sa4 to Sa8 bits (E1 mode), or the FDL (T1 mode). Each HDLC controller has 128-byte buffers in the transmit and receive paths. When used with time slots, the user can select any time slot or multiple time slots, contiguous or noncontiguous, as well as any specific bits within the time slot(s) to assign to the HDLC controllers.

The user must not map both transmit HDLC controllers to the same Sa bits, time slots or, in T1 mode, map both controllers to the FDL. HDLC #1 and HDLC #2 are identical in operation and therefore the following operational description refers only to a singular controller.

The HDLC controller performs the entire necessary overhead for generating and receiving performance report messages (PRMs) as described in ANSI T1.403 and the messages as described in AT&T TR54016. The HDLC controller automatically generates and detects flags, generates and checks the CRC check sum, generates and detects abort sequences, stuffs and destuffs zeros, and byte aligns to the data stream. The 128-byte buffers in the HDLC controller are large enough to allow a full PRM to be received or transmitted without host intervention.

23.1 Basic Operation Details

The HDLC registers are divided into four groups: control/configuration, status/information, mapping, and FIFOs. Table 23-A lists these registers by group.

23.2 HDLC Configuration

The HxTC and HxRC registers perform the basic configuration of the HDLC controllers. Operating features such as CRC generation, zero stuffer, transmit and receive HDLC mapping options, and idle flags are selected here. These registers also reset the HDLC controllers.

Table 23-A. HDLC Controller Registers

REGISTER	FUNCTION
CONTROL AND CONFIGURATION	
H1TC, HDLC #1 Transmit Control Register **H2TC**, HDLC #2 Transmit Control Register	General control over the transmit HDLC controllers
H1RC, HDLC #1 Receive Control Register **H2RC**, HDLC #2 Receive Control Register	General control over the receive HDLC controllers
H1FC, HDLC #1 FIFO Control Register **H2FC**, HDLC #2 FIFO Control Register	Sets high watermark for receiver and low watermark for transmitter
STATUS AND INFORMATION	
SR6, HDLC #1 Status Register **SR7**, HDLC #2 Status Register	Key status information for both transmit and receive directions
IMR6, HDLC #1 Interrupt Mask Register **IMR7**, HDLC #2 Interrupt Mask Register	Selects which bits in the status registers (SR7 and SR8) cause interrupts
INFO4, HDLC #1 and #2 Information Register **INFO5**, HDLC #1 Information Register **INFO6**, HDLC #2 Information Register	Information about HDLC controller
H1RPBA, HDLC #1 Receive Packet Bytes Available Register **H2RPBA**, HDLC #2 Receive Packet Bytes Available Register	Indicates the number of bytes that can be read from the receive FIFO
H1TFBA, HDLC #1 Transmit FIFO Buffer Available Register **H2TFBA**, HDLC #2 Transmit FIFO Buffer Available Register	Indicates the number of bytes that can be written to the transmit FIFO
MAPPING	
H1RCS1, H1RCS2, H1RCS3, H1RCS4, HDLC #1 Receive Channel Select Registers **H2RCS1, H2RCS2, H2RCS3, H2RCS4,** HDLC #2 Receive Channel Select Registers	Selects which channels are mapped to the receive HDLC controller
H1RTSBS, HDLC #1 Receive TS/Sa Bit Select Register **H2RTSBS,** HDLC #2 Receive TS/Sa Bit Select Register	Selects which bits in a channel are used or which Sa bits are used by the receive HDLC controller
H1TCS1, H1TCS2, H1TCS3, H1TCS4, HDLC #1 Transmit Channel Select Registers **H2TCS1, H2TCS2, H2TCS3, H2TCS4,** HDLC #2 Transmit Channel Select Registers	Selects which channels are mapped to the transmit HDLC controller
H1TTSBS, HDLC # 1 Transmit TS/Sa Bit Select Register **H2TTSBS,** HDLC # 2 Transmit TS/Sa Bit Select Register	Selects which bits in a channel are used or which Sa bits are used by the transmit HDLC controller
FIFOs	
H1RF, HDLC #1 Receive FIFO Register **H2RF**, HDLC #1 Receive FIFO Register	Access to 128-byte receive FIFO
H1TF, HDLC #1 Transmit FIFO Register **H2TF**, HDLC #2 Transmit FIFO Register	Access to 128-byte transmit FIFO

Register Name: **H1TC, H2TC**
Register Description: **HDLC #1 Transmit Control**
HDLC #2 Transmit Control
Register Address: **90h, A0h**

Bit #	7	6	5	4	3	2	1	0
Name	NOFS	TEOML	THR	THMS	TFS	TEOM	TZSD	TCRCD
Default	0	0	0	0	0	0	0	0

Bit 0/Transmit CRC Defeat (TCRCD). A 2-byte CRC code is automatically appended to the outbound message. This bit can be used to disable the CRC function.

0 = enable CRC generation (normal operation)
1 = disable CRC generation

Bit 1/Transmit Zero-Stuffer Defeat (TZSD). The zero-stuffer function automatically inserts a 0 in the message field (between the flags) after five consecutive 1s to prevent the emulation of a flag or abort sequence by the data pattern. The receiver automatically removes (destuffs) any 0 after five 1s in the message field.

0 = enable the zero stuffer (normal operation)
1 = disable the zero stuffer

Bit 2/Transmit End of Message (TEOM). Should be set to a 1 just before the last data byte of an HDLC packet is written into the transmit FIFO at HxTF. If not disabled through TCRCD, the transmitter automatically appends a 2-byte CRC code to the end of the message.

Bit 3/Transmit Flag/Idle Select (TFS). This bit selects the intermessage fill character after the closing and before the opening flags (7Eh).

0 = 7Eh
1 = FFh

Bit 4/Transmit HDLC Mapping Select (THMS)

0 = transmit HDLC assigned to channels
1 = transmit HDLC assigned to FDL (T1 mode), Sa bits (E1 mode)

Bit 5/Transmit HDLC Reset (THR). Resets the transmit HDLC controller and flushes the transmit FIFO. An abort followed by 7Eh or FFh flags/idle is transmitted until a new packet is initiated by writing new data into the FIFO. Must be cleared and set again for a subsequent reset.

0 = normal operation
1 = reset transmit HDLC controller and flush the transmit FIFO

Bit 6/Transmit End of Message and Loop (TEOML). To loop on a message, this bit should be set to a 1 just before the last data byte of an HDLC packet is written into the transmit FIFO. The message repeats until the user clears this bit or a new message is written to the transmit FIFO. If the host clears the bit, the looping message completes, then flags are transmitted until a new message is written to the FIFO. If the host terminates the loop by writing a new message to the FIFO, the loop terminates, one or two flags are transmitted, and the new message starts. If not disabled through TCRCD, the transmitter automatically appends a 2-byte CRC code to the end of all messages. This is useful for transmitting consecutive SS7 FISUs without host intervention.

Bit 7/Number of Flags Select (NOFS)

0 = send one flag between consecutive messages
1 = send two flags between consecutive messages

Register Name: **H1RC, H2RC**
Register Description: **HDLC #1 Receive Control**
HDLC #2 Receive Control
Register Address: **31h, 32h**

Bit #	7	6	5	4	3	2	1	0
Name	RHR	RHMS	—	—	—	—	—	RSFD
Default	0	0	0	0	0	0	0	0

Bit 0/Receive SS7 Fill-In Signal Unit Delete (RSFD)

0 = normal operation; all FISUs are stored in the receive FIFO and reported to the host.
1 = When a consecutive FISU having the same BSN the previous FISU is detected, it is deleted without host intervention.

Bits 1 to 5/Unused, must be set to 0 or proper operation

Bit 6/Receive HDLC Mapping Select (RHMS)

0 = receive HDLC assigned to channels
1 = receive HDLC assigned to FDL (T1 mode), Sa bits (E1 mode)

Bit 7/Receive HDLC Reset (RHR). Resets the receive HDLC controller and flushes the receive FIFO. Must be cleared and set again for a subsequent reset.

0 = normal operation
1 = reset receive HDLC controller and flush the receive FIFO

23.2.1 FIFO Control

The FIFO control register (HxFC) controls and sets the watermarks for the transmit and receive FIFOs. Bits 3, 4, and 5 set the transmit low watermark and the lower 3 bits set the receive high watermark.

When the transmit FIFO empties below the low watermark, the TLWM bit in the appropriate HDLC status register SR6 or SR7 is set. TLWM is a real-time bit and remains set as long as the transmit FIFO's read pointer is below the watermark. If enabled, this condition can also cause an interrupt through the $\overline{\text{INT}}$ pin.

When the receive FIFO fills above the high watermark, the RHWM bit in the appropriate HDLC status register is set. RHWM is a real-time bit and remains set as long as the receive FIFO's write pointer is above the watermark. If enabled, this condition can also cause an interrupt through the $\overline{\text{INT}}$ pin.

Register Name: **H1FC, H2FC**
Register Description: **HDLC # 1 FIFO Control**
HDLC # 2 FIFO Control
Register Address: **91h, A1h**

Bit #	7	6	5	4	3	2	1	0
Name	—	—	TFLWM2	TFLWM1	TFLWM0	RFHWM2	RFHWM1	RFHWM0
Default	0	0	0	0	0	0	0	0

Bits 0 to 2/Receive FIFO High-Watermark Select (RFHWM0 to RFHWM2)

RFHWM2	RFHWM1	RFHWM0	Receive FIFO Watermark (bytes)
0	0	0	4
0	0	1	16
0	1	0	32
0	1	1	48
1	0	0	64
1	0	1	80
1	1	0	96
1	1	1	112

Bits 3 to 5/Transmit FIFO Low-Watermark Select (TFLWM0 to TFLWM2)

TFLWM2	TFLWM1	TFLWM0	Transmit FIFO Watermark (bytes)
0	0	0	4
0	0	1	16
0	1	0	32
0	1	1	48
1	0	0	64
1	0	1	80
1	1	0	96
1	1	1	112

Bits 6, 7/Unused, must be set to 0 for proper operation

23.3 HDLC Mapping

23.3.1 Receive

The HDLC controllers must be assigned a space in the T1/E1 bandwidth in which they transmit and receive data. The controllers can be mapped to either the FDL (T1), Sa bits (E1), or to channels. If mapped to channels, then any channel or combination of channels, contiguous or not, can be assigned to an HDLC controller. When assigned to a channel(s), any combination of bits within the channel(s) can be avoided.

The HxRCS1–HxRCS4 registers are used to assign the receive controllers to channels 1–24 (T1) or 1–32 (E1) according to the following table:

Register	Channels
HxRCS1	1–8
HxRCS2	9–16
HxRCS3	17–24
HxRCS4	25–32

Register Name: **H1RCS1, H1RCS2, H1RCS3, H1RCS4**
H2RCS1, H2RCS2, H2RCS3, H2RCS4
Register Description: **HDLC # 1 Receive Channel Select x**
HDLC # 2 Receive Channel Select x
Register Address: **92h, 93h, 94h, 95h**
A2h, A3h, A4h, A5h

Bit #	7	6	5	4	3	2	1	0
Name	RHCS7	RHCS6	RHCS5	RHCS4	RHCS3	RHCS2	RHCS1	RHCS0
Default	0	0	0	0	0	0	0	0

Bit 0/Receive HDLC Channel Select Bit 0 (RHCS0). Select Channel 1, 9, 17, or 25.

Bit 1/Receive HDLC Channel Select Bit 1 (RHCS1). Select Channel 2, 10, 18, or 26.

Bit 2/Receive HDLC Channel Select Bit 2 (RHCS2). Select Channel 3, 11, 19, or 27.

Bit 3/Receive HDLC Channel Select Bit 3 (RHCS3). Select Channel 4, 12, 20, or 28.

Bit 4/Receive HDLC Channel Select Bit 4 (RHCS4). Select Channel 5, 13, 21, or 29.

Bit 5/Receive HDLC Channel Select Bit 5 (RHCS5). Select Channel 6, 14, 22, or 30.

Bit 6/Receive HDLC Channel Select Bit 6 (RHCS6). Select Channel 7, 15, 23, or 31.

Bit 7/Receive HDLC Channel Select Bit 7 (RHCS7). Select Channel 8, 16, 24, or 32.

Register Name: **H1RTSBS, H2RTSBS**
Register Description: **HDLC # 1 Receive Time Slot Bits/Sa Bits Select**
HDLC # 2 Receive Time Slot Bits/Sa Bits Select
Register Address: **96h, A6h**

Bit #	7	6	5	4	3	2	1	0
Name	RCB8SE	RCB7SE	RCB6SE	RCB5SE	RCB4SE	RCB3SE	RCB2SE	RCB1SE
Default	0	0	0	0	0	0	0	0

Bit 0/Receive Channel Bit 1 Suppress Enable/Sa8 Bit Enable (RCB1SE). LSB of the channel. Set to 1 to stop this bit from being used.

Bit 1/Receive Channel Bit 2 Suppress Enable/Sa7 Bit Enable (RCB2SE). Set to 1 to stop this bit from being used.

Bit 2/Receive Channel Bit 3 Suppress Enable/Sa6 Bit Enable (RCB3SE). Set to 1 to stop this bit from being used.

Bit 3/Receive Channel Bit 4 Suppress Enable/Sa5 Bit Enable (RCB4SE). Set to 1 to stop this bit from being used.

Bit 4/Receive Channel Bit 5 Suppress Enable/Sa4 Bit Enable (RCB5SE). Set to 1 to stop this bit from being used.

Bit 5/Receive Channel Bit 6 Suppress Enable (RCB6SE). Set to 1 to stop this bit from being used.

Bit 6/Receive Channel Bit 7 Suppress Enable (RCB7SE). Set to 1 to stop this bit from being used.

Bit 7/Receive Channel Bit 8 Suppress Enable (RCB8SE). MSB of the channel. Set to 1 to stop this bit from being used.

23.3.2 Transmit

The HxTCS1–HxTCS4 registers are used to assign the transmit controllers to channels 1–24 (T1) or 1–32 (E1) according to the following table.

Register	Channels
HxTCS1	1–8
HxTCS2	9–16
HxTCS3	17–24
HxTCS4	25–32

Register Name: **H1TCS1, H1TCS2, H1TCS3, H1TCS4**
H2TCS1, H2TCS2, H2TCS3, H2TCS4
Register Description: **HDLC # 1 Transmit Channel Select**
HDLC # 2 Transmit Channel Select
Register Address: **97h, 98h, 99h, 9Ah**
A7h, A8h, A9h, AAh

Bit #	7	6	5	4	3	2	1	0
Name	THCS7	THCS6	THCS5	THCS4	THCS3	THCS2	THCS1	THCS0
Default	0	0	0	0	0	0	0	0

Bit 0/Transmit HDLC Channel Select Bit 0 (THCS0). Select Channel 1, 9, 17, or 25.

Bit 1/Transmit HDLC Channel Select Bit 1 (THCS1). Select Channel 2, 10, 18, or 26.

Bit 2/Transmit HDLC Channel Select Bit 2 (THCS2). Select Channel 3, 11, 19, or 27.

Bit 3/Transmit HDLC Channel Select Bit 3 (THCS3). Select Channel 4, 12, 20, or 28.

Bit 4/Transmit HDLC Channel Select Bit 4 (THCS4). Select Channel 5, 13, 21, or 29.

Bit 5/Transmit HDLC Channel Select Bit 5 (THCS5). Select Channel 6, 14, 22, or 30.

Bit 6/Transmit HDLC Channel Select Bit 6 (THCS6). Select Channel 7, 15, 23, or 31.

Bit 7/Transmit HDLC Channel Select Bit 7 (THCS7). Select Channel 8, 16, 24, or 32.

Register Name: **H1TTSBS, H2TTSBS**
Register Description: **HDLC # 1 Transmit Time Slot Bits/Sa Bits Select**
HDLC # 2 Transmit Time Slot Bits/Sa Bits Select
Register Address: **9Bh, ABh**

Bit #	7	6	5	4	3	2	1	0
Name	TCB8SE	TCB7SE	TCB6SE	TCB5SE	TCB4SE	TCB3SE	TCB2SE	TCB1SE
Default	0	0	0	0	0	0	0	0

Bit 0/Transmit Channel Bit 1 Suppress Enable/Sa8 Bit Enable (TCB1SE). LSB of the channel. Set to 1 to stop this bit from being used.

Bit 1/Transmit Channel Bit 2 Suppress Enable/Sa7 Bit Enable (TCB1SE). Set to 1 to stop this bit from being used.

Bit 2/Transmit Channel Bit 3 Suppress Enable/Sa6 Bit Enable (TCB1SE). Set to 1 to stop this bit from being used.

Bit 3/Transmit Channel Bit 4 Suppress Enable/Sa5 Bit Enable (TCB1SE). Set to 1 to stop this bit from being used.

Bit 4/Transmit Channel Bit 5 Suppress Enable/Sa4 Bit Enable (TCB1SE). Set to 1 to stop this bit from being used.

Bit 5/Transmit Channel Bit 6 Suppress Enable (TCB1SE). Set to 1 to stop this bit from being used.

Bit 6/Transmit Channel Bit 7 Suppress Enable (TCB1SE). Set to 1 to stop this bit from being used.

Bit 7/Transmit Channel Bit 8 Suppress Enable (TCB1SE). MSB of the channel. Set to 1 to stop this bit from being used.

Register Name: **SR6, SR7**
Register Description: **HDLC #1 Status Register 6**
HDLC #2 Status Register 7
Register Address: **20h, 22h**

Bit #	7	6	5	4	3	2	1	0
Name	—	TMEND	RPE	RPS	RHWM	RNE	TLWM	TNF
Default	0	0	0	0	0	0	0	0

Bit 0/Transmit FIFO Not Full Condition (TNF). Set when the transmit 128-byte FIFO has at least 1 byte available.

Bit 1/Transmit FIFO Below Low-Watermark Condition (TLWM). Set when the transmit 128-byte FIFO empties beyond the low watermark as defined by the transmit low-watermark register (TLWMR).

Bit 2/Receive FIFO Not Empty Condition (RNE). Set when the receive 128-byte FIFO has at least 1 byte available for a read.

Bit 3/Receive FIFO Above High-Watermark Condition (RHWM). Set when the receive 128-byte FIFO fills beyond the high watermark as defined by the receive high-watermark register (RHWMR).

Bit 4/Receive Packet-Start Event (RPS). Set when the HDLC controller detects an opening byte. This is a latched bit and is cleared when read.

Bit 5/Receive Packet-End Event (RPE). Set when the HDLC controller detects either the finish of a valid message (i.e., CRC check complete) or when the controller has experienced a message fault such as a CRC checking error, or an overrun condition, or an abort has been seen. This is a latched bit and is cleared when read.

Bit 6/Transmit Message-End Event (TMEND). Set when the transmit HDLC controller has finished sending a message. This is a latched bit and is cleared when read.

Register Name: **IMR6, IMR7**
Register Description: **HDLC # 1 Interrupt Mask Register 6**
HDLC # 2 Interrupt Mask Register 7
Register Address: **21h, 23h**

Bit #	7	6	5	4	3	2	1	0
Name	—	TMEND	RPE	RPS	RHWM	RNE	TLWM	TNF
Default	0	0	0	0	0	0	0	0

Bit 0/Transmit FIFO Not Full Condition (TNF)
0 = interrupt masked
1 = interrupt enabled—interrupts on rising edge only

Bit 1/Transmit FIFO Below Low-Watermark Condition (TLWM)
0 = interrupt masked
1 = interrupt enabled—interrupts on rising edge only

Bit 2/Receive FIFO Not Empty Condition (RNE)
0 = interrupt masked
1 = interrupt enabled—interrupts on rising edge only

Bit 3/Receive FIFO Above High-Watermark Condition (RHWM)
0 = interrupt masked
1 = interrupt enabled—interrupts on rising edge only

Bit 4/Receive Packet-Start Event (RPS)
0 = interrupt masked
1 = interrupt enabled

Bit 5/Receive Packet-End Event (RPE)
0 = interrupt masked
1 = interrupt enabled

Bit 6/Transmit Message-End Event (TMEND)
0 = interrupt masked
1 = interrupt enabled

Register Name: **INFO5, INFO6**
Register Description: **HDLC #1 Information Register**
HDLC #2 Information Register
Register Address: **2Eh, 2Fh**

Bit #	7	6	5	4	3	2	1	0
Name	—	—	TEMPTY	TFULL	REMPTY	PS2	PS1	PS0
Default	0	0	0	0	0	0	0	0

Bits 0 to 2/Receive Packet Status (PS0 to PS2). These are real-time bits indicating the status as of the last read of the receive FIFO.

PS2	PS1	PS0	Packet Status
0	0	0	**In Progress**
0	0	1	**Packet OK:** Packet ended with correct CRC codeword
0	1	0	**CRC Error:** A closing flag was detected, preceded by a corrupt CRC codeword
0	1	1	**Abort:** Packet ended because an abort signal was detected (seven or more 1s in a row).
1	0	0	**Overrun:** HDLC controller terminated reception of packet because receive FIFO is full.

Bit 3/Receive FIFO Empty (REMPTY). A real-time bit that is set high when the receive FIFO is empty.

Bit 4/Transmit FIFO Full (TFULL). A real-time bit that is set high when the FIFO is full.

Bit 5/Transmit FIFO Empty (TEMPTY). A real-time bit that is set high when the FIFO is empty.

Register Name: **INFO4**
Register Description: **HDLC Event Information Register #4**
Register Address: **2Dh**

Bit #	7	6	5	4	3	2	1	0
Name	—	—	—	—	H2UDR	H2OBT	H1UDR	H1OBT
Default	0	0	0	0	0	0	0	0

Bit 0/HDLC #1 Opening Byte Event (H1OBT). Set when the next byte available in the receive FIFO is the first byte of a message.

Bit 1/HDLC #1 Transmit FIFO Underrun Event (H1UDR). Set when the transmit FIFO empties out without having seen the TMEND bit set. An abort is automatically sent. This bit is latched and is cleared when read.

Bit 2/HDLC #2 Opening Byte Event (H2OBT). Set when the next byte available in the receive FIFO is the first byte of a message.

Bit 3/HDLC #2 Transmit FIFO Underrun Event (H2UDR). Set when the transmit FIFO empties out without having seen the TMEND bit set. An abort is automatically sent. This bit is latched and is cleared when read.

23.3.3 FIFO Information

The transmit FIFO buffer-available register indicates the number of bytes that can be written into the transmit FIFO. The count form this register informs the host as to how many bytes can be written into the transmit FIFO without overflowing the buffer.

Register Name: **H1TFBA, H2TFBA**
Register Description: **HDLC # 1 Transmit FIFO Buffer Available**
HDLC # 2 Transmit FIFO Buffer Available
Register Address: **9Fh, Afh**

Bit #	7	6	5	4	3	2	1	0
Name	TFBA7	TFBA6	TFBA5	TFBA4	TFBA3	TFBA2	TFBA1	TFBA0
Default	0	0	0	0	0	0	0	0

Bits 0 to 7/Transmit FIFO Bytes Available (TFBAO to TFBA7). TFBA0 is the LSB.

23.3.4 Receive Packet-Bytes Available

The lower 7 bits of the receive packet-bytes available register indicates the number of bytes (0 through 127) that can be read from the receive FIFO. The value indicated by this register (lower seven bits) informs the host as to how many bytes can be read from the receive FIFO without going past the end of a message. This value refers to one of four possibilities: the first part of a packet, the continuation of a packet, the last part of a packet, or a complete packet. After reading the number of bytes indicated by this register, the host then checks the HDLC information register for detailed message status.

If the value in the HxRPBA register refers to the beginning portion of a message or continuation of a message, then the MSB of the HxRPBA register returns a value of 1. This indicates that the host can safely read the number of bytes returned by the lower seven bits of the HxRPBA register, but there is no need to check the information register since the packet has not yet terminated (successfully or otherwise).

Register Name: **H1RPBA, H2RPBA**
Register Description: **HDLC # 1 Receive Packet Bytes Available**
HDLC # 2 Receive Packet Bytes Available
Register Address: **9Ch, ACh**

Bit #	7	6	5	4	3	2	1	0
Name	MS	RPBA6	RPBA5	RPBA4	RPBA3	RPBA2	RPBA1	RPBA0
Default	0	0	0	0	0	0	0	0

Bits 0 to 6/Receive FIFO Packet Bytes Available Count (RPBA0 to RPBA6). RPBA0 is the LSB.

Bit 7/Message Status (MS)

0 = bytes indicated by RPBA0 through RPBA6 are the end of a message. Host must check the INFO5 or INFO6 register for details.

1 = bytes indicated by RPBA0 through RPBA6 are the beginning or continuation of a message. The host does not need to check the INFO5 or INFO6 register.

23.3.5 HDLC FIFOs

Register Name: **H1TF, H2TF**
Register Description: **HDLC # 1 Transmit FIFO**
HDLC # 2 Transmit FIFO
Register Address: **9Dh, ADh**

Bit #	7	6	5	4	3	2	1	0
Name	THD7	THD6	THD5	THD4	THD3	THD2	THD1	THD0
Default	0	0	0	0	0	0	0	0

Bit 0/Transmit HDLC Data Bit 0 (THD0). LSB of an HDLC packet data byte.

Bit 1/Transmit HDLC Data Bit 1 (THD1)

Bit 2/Transmit HDLC Data Bit 2 (THD2)

Bit 3/Transmit HDLC Data Bit 3 (THD3)

Bit 4/Transmit HDLC Data Bit 4 (THD4)

Bit 5/Transmit HDLC Data Bit 5 (THD5)

Bit 6/Transmit HDLC Data Bit 6 (THD6)

Bit 7/Transmit HDLC Data Bit 7 (THD7). MSB of an HDLC packet data byte.

Register Name: **H1RF, H2RF**
Register Description: **HDLC # 1 Receive FIFO**
HDLC # 2 Receive FIFO
Register Address: **9Eh, AEh**

Bit #	7	6	5	4	3	2	1	0
Name	RHD7	RHD6	RHD5	RHD4	RHD3	RHD2	RHD1	RHD0
Default	0	0	0	0	0	0	0	0

Bit 0/Receive HDLC Data Bit 0 (RHD0). LSB of an HDLC packet data byte.

Bit 1/Receive HDLC Data Bit 1 (RHD1)

Bit 2/Receive HDLC Data Bit 2 (RHD2)

Bit 3/Receive HDLC Data Bit 3 (RHD3)

Bit 4/Receive HDLC Data Bit 4 (RHD4)

Bit 5/Receive HDLC Data Bit 5 (RHD5)

Bit 6/Receive HDLC Data Bit 6 (RHD6)

Bit 7/Receive HDLC Data Bit 7 (RHD7). MSB of an HDLC packet data byte.

23.4 Receive HDLC Code Example

The following is an example of a receive HDLC routine:

1) Reset receive HDLC controller.
2) Set HDLC mode, mapping, and high watermark.
3) Start new message buffer.
4) Enable RPE and RHWM interrupts.
5) Wait for interrupt.
6) Disable RPE and RHWM interrupts.
7) Read HxRPBA register. N = HxRPBA (lower 7 bits are byte count, MSB is status).
8) Read (N and 7Fh) bytes from receive FIFO and store in message buffer.
9) Read INFO5 register.
10) If PS2, PS1, PS0 = 000, then go to Step 4.
11) If PS2, PS1, PS0 = 001, then packet terminated OK, save present message buffer.
12) If PS2, PS1, PS0 = 010, then packet terminated with CRC error.
13) If PS2, PS1, PS0 = 011, then packet aborted.
14) If PS2, PS1, PS0 = 100, then FIFO overflowed.
15) Go to Step 3.

23.5 Legacy FDL Support (T1 Mode)

23.5.1 Overview

To provide backward compatibility to the older DS21x52 T1 device, the DS2155 maintains the circuitry that existed in the previous generation of the T1 framer. In new applications, it is recommended that the HDLC controllers and BOC controller described in Section 21 and 23 are used.

23.5.2 Receive Section

In the receive section, the recovered FDL bits or Fs bits are shifted bit-by-bit into the receive FDL register (RFDL). Because the RFDL is 8 bits in length, it fills up every 2ms (8 x 250µs). The framer signals an external microcontroller that the buffer has filled through the SR8.3 bit. If enabled through IMR8.3, the INT pin toggles low, indicating that the buffer has filled and needs to be read. The user has 2ms to read this data before it is lost. If the byte in the RFDL matches either of the bytes programmed into the RFDLM1 or RFDLM2 registers, then the SR8.1 bit is set to a 1 and the INT pin toggles low if enabled through IMR8.1. This feature allows an external microcontroller to ignore the FDL or Fs pattern until an important event occurs.

The framer also contains a zero destuffer, which is controlled through the T1RCR2.3 bit. In both ANSI T1.403 and TR54016, communications on the FDL follows a subset of an LAPD protocol. The LAPD protocol states that no more than five 1s should be transmitted in a row so that the data does not resemble an opening or closing flag (01111110) or an abort signal (11111111). If enabled through T1RCR2.3, the DS2155 automatically looks for five 1s in a row, followed by a 0. If it finds such a pattern, it automatically removes the zero. If the zero destuffer sees six or more 1s in a row followed by a 0, the 0 is not removed. The T1RCR2.3 bit should always be set to a 1 when the DS2155 is extracting the FDL. Refer to *Application Note 335: DS2141A, DS2151 Controlling the FDL* for information about using the DS2155 in FDL applications in this legacy support mode.

Register Name: **RFDL**
Register Description: **Receive FDL Register**
Register Address: **C0h**

Bit #	7	6	5	4	3	2	1	0
Name	RFDL7	RFDL6	RFDL5	RFDL4	RFDL3	RFDL2	RFDL1	RFDL0
Default	0	0	0	0	0	0	0	0

The receive FDL register (RFDL) reports the incoming FDL or the incoming Fs bits. The LSB is received first.

Bit 0/Receive FDL Bit 0 (RFDL0). LSB of the received FDL code.

Bit 1/Receive FDL Bit 1 (RFDL1)

Bit 2/Receive FDL Bit 2 (RFDL2)

Bit 3/Receive FDL Bit 3 (RFDL3)

Bit 4/Receive FDL Bit 4 (RFDL4)

Bit 5/Receive FDL Bit 5 (RFDL5)

Bit 6/Receive FDL Bit 6 (RFDL6)

Bit 7/Receive FDL Bit 7 (RFDL7). MSB of the received FDL code.

Register Name: **RFDLM1, RFDLM2**
Register Description: **Receive FDL Match Register 1**
Receive FDL Match Register 2
Register Address: **C2h, C3h**

Bit #	7	6	5	4	3	2	1	0
Name	RFDLM7	RFDLM6	RFDLM5	RFDLM4	RFDLM3	RFDLM2	RFDLM1	RFDLM0
Default	0	0	0	0	0	0	0	0

Bit 0/Receive FDL Match Bit 0 (RFDLM0). LSB of the FDL match code.

Bit 1/Receive FDL Match Bit 1 (RFDLM1)

Bit 2/Receive FDL Match Bit 2 (RFDLM2)

Bit 3/Receive FDL Match Bit 3 (RFDLM3)

Bit 4/Receive FDL Match Bit 4 (RFDLM4)

Bit 5/Receive FDL Match Bit 5 (RFDLM5)

Bit 6/Receive FDL Match Bit 6 (RFDLM6)

Bit 7/Receive FDL Match Bit 7 (RFDLM7). MSB of the FDL match code.

23.5.3 Transmit Section

The transmit section shifts out into the T1 data stream either the FDL (in the ESF framing mode) or the Fs bits (in the D4 framing mode) contained in the transmit FDL register (TFDL). When a new value is written to the TFDL, it is multiplexed serially (LSB first) into the proper position in the outgoing T1 data stream. After the full 8 bits have been shifted out, the framer signals the host microcontroller by setting the SR8.2 bit to a 1 that the buffer is empty and that more data is needed. The INT also toggles low if enabled through IMR8.2. The user has 2ms to update the TFDL with a new value. If the TFDL is not updated, the old value in the TFDL is transmitted once again. The framer also contains a zero stuffer that is controlled through the T1TCR2.5 bit. In both ANSI T1.403 and TR54016, communications on the FDL follows a subset of an LAPD protocol. The LAPD protocol states that no more than five 1s should be transmitted in a row so that the data does not resemble an opening or closing flag (01111110) or an abort signal (11111111). If enabled through T1TCR2.5, the framer automatically looks for five 1s in a row. If it finds such a pattern, it automatically inserts a 0 after the five 1s. The T1TCR2.5 bit should always be set to a 1 when the framer is inserting the FDL.

Register Name: **TFDL**
Register Description: **Transmit FDL Register**
Register Address: **C1h**

Bit #	7	6	5	4	3	2	1	0
Name	TFDL7	TFDL6	TFDL5	TFDL4	TFDL3	TFDL2	TFDL1	TFDL0
Default	0	0	0	0	0	0	0	0

Note: Also used to insert Fs framing pattern in D4 framing mode.

The transmit FDL register (TFDL) contains the FDL information that is to be inserted on a byte basis into the outgoing T1 data stream. The LSB is transmitted first.

Bit 0/Transmit FDL Bit 0 (TFDL0). LSB of the transmit FDL code.

Bit 1/Transmit FDL Bit 1 (TFDL1)

Bit 2/Transmit FDL Bit 2 (TFDL2)

Bit 3/Transmit FDL Bit 3 (TFDL3)

Bit 4/Transmit FDL Bit 4 (TFDL4)

Bit 5/Transmit FDL Bit 5 (TFDL5)

Bit 6/Transmit FDL Bit 6 (TFDL6)

Bit 7/Transmit FDL Bit 7 (TFDL7). MSB of the transmit FDL code.

23.6 D4/SLC-96 Operation

In the D4 framing mode, the framer uses the TFDL register to insert the Fs framing pattern. To allow the device to properly insert the Fs framing pattern, the TFDL register at address C1h must be programmed to 1Ch and the following bits must be programmed as shown:

T1TCR1.2 = 0 (source Fs data from the TFDL register)
T1TCR2.6 = 1 (allow the TFDL register to load on multiframe boundaries)

Since the SLC-96 message fields share the Fs-bit position, the user can access these message fields through the TFDL and RFDL registers. Refer to *Application Note 345: DS2141A, DS2151, DS2152 SLC-96* for a detailed description about implementing an SLC-96 function.

24. LINE INTERFACE UNIT (LIU)

The LIU contains three sections: the receiver that handles clock and data recovery, the transmitter that waveshapes and drives the T1 line, and the jitter attenuator. These three sections are controlled by the line interface control registers (LIC1–LIC4), which are described in the following sections. The LIU has its own T1/E1 mode-select bit and can operate independently of the framer function.

The DS2155 can switch between T1 or E1 networks without changing any external components on either the transmit or receive side. Figure 24-3 shows a network connection using minimal components. In this configuration, the DS2155 can connect to T1, J1, or E1 (75Ω or 120Ω) without any component change. The receiver can adjust the 120Ω termination to 100Ω or 75Ω. The transmitter can adjust its output impedance to provide high return-loss characteristics for 120Ω, 100Ω, and 75Ω lines. Other components can be added to this configuration to meet safety and network protection requirements (Section 24.8).

24.1 LIU Operation

The analog AMI/HDB3 waveform off the E1 line or the AMI/B8ZS waveform off of the T1 line is transformer-coupled into the RTIP and RRING pins of the DS2155. The user has the option to use internal termination, software selectable for 75Ω/100Ω/120Ω applications, or external termination. The LIU recovers clock and data from the analog signal and passes it through the jitter-attenuation mux outputting the received line clock at RCLKO and bipolar or NRZ data at RPOSO and RNEGO. The DS2155 contains an active filter that reconstructs the analog-received signal for the nonlinear losses that occur in transmission. The receive circuitry also is configurable for various monitor applications. The device has a usable receive sensitivity of 0dB to -43dB for E1 and 0dB to -36dB for T1, which allow the device to operate on 0.63mm (22AWG) cables up to 2.5km (E1) and 6k feet (T1) in length. Data input at TPOSI and TNEGI is sent through the jitter-attenuation mux to the waveshaping circuitry and line driver. The DS2155 drives the E1 or T1 line from the TTIP and TRING pins through a coupling transformer. The line driver can handle both CEPT 30/ISDN-PRI lines for E1 and long-haul (CSU) or short-haul (DSX-1) lines for T1.

24.2 Receiver

The DS2155 contains a digital clock recovery system. The DS2155 couples to the receive E1 or T1 twisted pair (or coaxial cable in 75Ω E1 applications) through a 1:1 transformer. See Table 24-C for transformer details. The DS2155 has the option of using software-selectable termination requiring only a single fixed pair of termination resistors.

The DS2155's LIU is designed to be fully software selectable for E1 and T1, requiring no change to any external resistors for the receive side. The receive side allows the user to configure the DS2155 for 75Ω, 100Ω, or 120Ω receive termination by setting the RT1 (LIC4.1) and RT0 (LIC4.0) bits. When using the internal termination feature, the resistors labeled R in Figure 24-3 should be 60Ω each. If external termination is used, RT1 and RT0 should be set to 0 and the resistors labeled R in Figure 24-3 should be 37.5Ω, 50Ω, or 60Ω each, depending on the line impedance.

There are two ranges of user-selectable receive sensitivity for T1 and E1. The EGL bit of LIC1 (LIC1.4) selects the full or limited sensitivity. The resultant E1 or T1 clock derived from MCLK is multiplied by 16 through an internal PLL and fed to the clock recovery system. The clock recovery system uses the clock from the PLL circuit to form a 16-times over-sampler that is used to recover the clock and data. This over-sampling technique offers outstanding performance to meet jitter tolerance specifications shown in Figure 24-7.

Normally, the clock that is output at the RCLK pin is the recovered clock from the E1 AMI/HDB3 or T1 AMI/B8ZS waveform presented at the RTIP and RRING inputs. If the jitter attenuator is placed in the receive path (as is the case in most applications), the jitter attenuator restores the RCLK to an approximate 50% duty cycle. If the jitter attenuator is either placed in the transmit path or is disabled, the RCLK output can exhibit slightly shorter high cycles of the clock. This is because of the highly over-sampled digital-clock recovery circuitry. See the *Receive AC Timing Characteristics* in Section 37.3 for more details. When no signal is present at RTIP and RRING, a receive carrier loss (RCL) condition occurs and the RCLK is derived from the JACLK source.

24.2.1 Receive Level Indicator and Threshold Interrupt

The DS2155 reports the signal strength at RTIP and RRING in 2.5dB increments through RL3–RL0 located in Information Register 2 (INFO2). This feature is helpful when trouble-shooting line-performance problems. The DS2155 can initiate an interrupt whenever the input falls below a certain level through the input-level under-threshold indicator (SR1.7). Using the RLT0–RLT4 bits of the CCR4 register, the user can set a threshold in 2.5dB increments. The SR1.7 bit is set whenever the input level at RTIP and RRING falls below the threshold set by the value in RLT0–RLT4. The level must remain below the programmed threshold for approximately 50ms for this bit to be set. The accuracy of the receive level indication is +/- 1 LSB (2.5dB) from 25C to 85C and +/- 2 LSB's (5dB) from –40C to 25C.

24.2.2 Receive G.703 Synchronization Signal (E1 Mode)

The DS2155 is capable of receiving a 2.048MHz square-wave synchronization clock as specified in Section 13 of ITU G.703, October 1998. In order to use the DS2155 in this mode, set the receive synchronization clock enable (LIC3.2) = 1.

24.2.3 Monitor Mode

Monitor applications in both E1 and T1 require various flat gain settings for the receive-side circuitry. The DS2155 can be programmed to support these applications through the monitor mode control bits MM1 and MM0 in the LIC3 register (Figure 24-1).

Figure 24-1. Typical Monitor Application

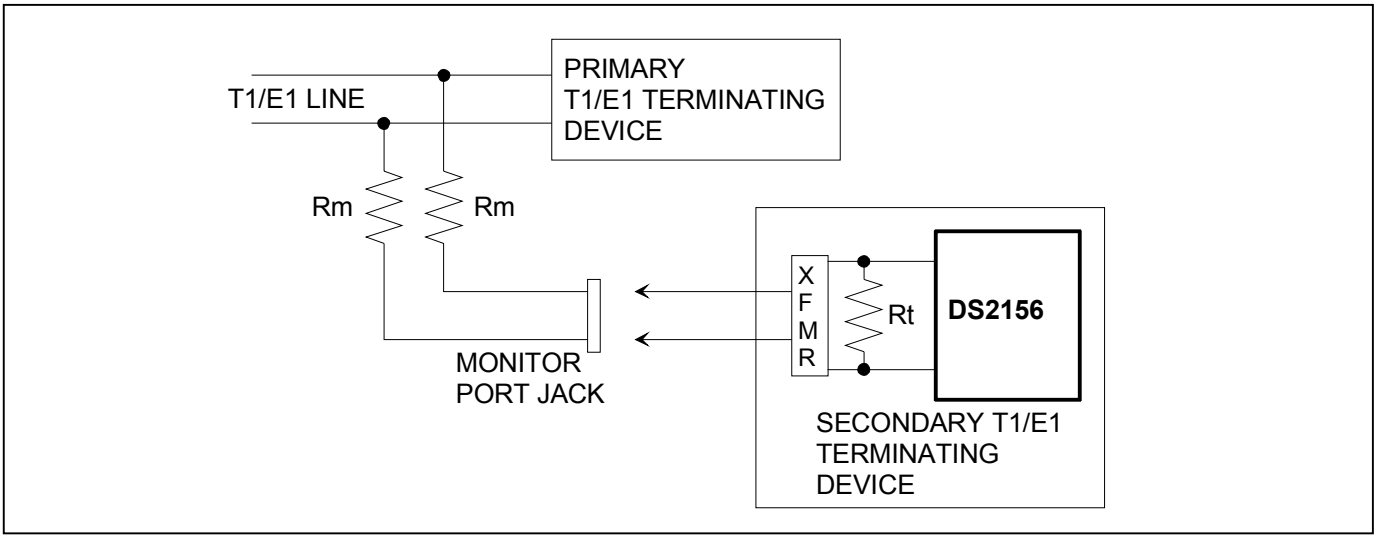

24.3 Transmitter

The DS2155 uses a phase-lock loop along with a precision digital-to-analog converter (DAC) to create the waveforms that are transmitted onto the E1 or T1 line. The waveforms created by the DS2155 meet the latest ETSI, ITU, ANSI, and AT&T specifications. The user selects which waveform is generated by setting the ETS bit (LIC2.7) for E1 or T1 operation, then programming the L2/L1/L0 bits in register LIC1 for the appropriate application.

A 2.048MHz or 1.544MHz clock is required at TCLKI for transmitting data presented at TPOSI and TNEGI. Normally these pins are connected to TCLKO, TPOSO, and TNEGO. However, the LIU can operate in an independent fashion. ITU specification G.703 requires an accuracy of ±50ppm for both T1 and E1. TR62411 and ANSI specifications require an accuracy of ±32ppm for T1 interfaces. The clock can be sourced internally from RCLK or JACLK. See LIC2.3, LIC4.4, and LIC4.5 for details. Because of the nature of the transmitter's design, very little jitter (less than $0.005UI_{P-P}$ broadband from 10Hz to 100kHz) is added to the jitter present on TCLK. Also, the waveforms created are independent of the duty cycle of TCLK. The transmitter in the DS2155 couples to the E1 or T1 transmit twisted pair (or coaxial cable in some E1 applications) through a 1:2 step-up transformer. For the device to create the proper waveforms, the transformer used must meet the specifications listed in Table 24-C. The DS2155 has the option of using software-selectable transmit termination.

The transmit line drive has two modes of operation: fixed gain or automatic gain. In the fixed gain mode, the transmitter outputs a fixed current into the network load to achieve a nominal pulse amplitude. In the automatic gain mode, the transmitter adjusts its output level to compensate for slight variances in the network load. See the *Transmit Line Build-Out Control (TLBC)* register for details.

24.3.1 Transmit Short-Circuit Detector/Limiter

The DS2155 has an automatic short-circuit limiter that limits the source current to 50mA (RMS) into a 1Ω load. This feature can be disabled by setting the SCLD bit (LIC2.1) = 1. TCLE (INFO2.5) provides a real-time indication of when the current limiter is activated. If the current limiter is disabled, TCLE indicates that a short-circuit condition exists. Status Register SR1.2 provides a latched version of the information, which can be used to activate an interrupt when enabled by the IMR1 register. The TPD bit (LIC1.0) powers down the transmit line driver and tri-states the TTIP and TRING pins.

24.3.2 Transmit Open-Circuit Detector

The DS2155 can also detect when the TTIP or TRING outputs are open circuited. TOCD (INFO2.4) provides a real-time indication of when an open circuit is detected. SR1 provides a latched version of the information (SR1.1), which can be used to activate an interrupt when enabled by the IMR1 register.

24.3.3 Transmit BPV Error Insertion

When IBPV (LIC2.5) is transitioned from a 0 to a 1, the device waits for the next occurrence of three consecutive 1s to insert a BPV. IBPV must be cleared and set again for another BPV error insertion.

24.3.4 Transmit G.703 Synchronization Signal (E1 Mode)

The DS2155 can transmit the 2.048MHz square-wave synchronization clock as specified in Section 13 of ITU G.703, October 1998. In order to transmit the 2.048MHz clock, when in E1 mode, set the transmit synchronization clock enable (LIC3.1) = 1.

24.4 MCLK Prescaler

A 16.384MHz, 8.192MHz, 4.096MHz, 2.048MHz, or 1.544MHz clock must be applied at MCLK. ITU specification G.703 requires an accuracy of ±50ppm for both T1 and E1. TR62411 and ANSI specifications require an accuracy of ±32ppm for T1 interfaces. A prescaler divides the 16MHz, 8MHz, or 4MHz clock down to 2.048MHz. There is an on-board PLL for the jitter attenuator, which converts the 2.048MHz clock to a 1.544MHz rate for T1 applications. Setting JAMUX (LIC2.3) to a logic 0 bypasses this PLL.

24.5 Jitter Attenuator

The DS2155 contains an on-board jitter attenuator that can be set to a depth of either 32 or 128 bits through the JABDS bit (LIC1.2). The 128-bit mode is used in applications where large excursions of wander are expected. The 32-bit mode is used in delay-sensitive applications. The characteristics of the attenuation are shown in Figure 24-9. The jitter attenuator can be placed in either the receive path or the transmit path by appropriately setting or clearing the JAS bit (LIC1.3). Setting the DJA bit (LIC1.1) disables (in effect, removes) the jitter attenuator. On-board circuitry adjusts either the recovered clock from the clock/data recovery block or the clock applied at the TCLK pin to create a smooth jitter-free clock that is used to clock data out of the jitter attenuator FIFO. It is acceptable to provide a gapped/bursty clock at the TCLK pin if the jitter attenuator is placed on the transmit side. If the incoming jitter exceeds either $120UI_{P-P}$ (buffer depth is 128 bits) or $28UI_{P-P}$ (buffer depth is 32 bits), then the DS2155 divides the internal nominal 32.768MHz (E1) or 24.704MHz (T1) clock by either 15 or 17 instead of the normal 16 to keep the buffer from overflowing. When the device divides by either 15 or 17, it also sets the jitter attenuator limit trip (JALT) bit in Status Register 1 (SR1.4).

24.6 CMI (Code Mark Inversion) Option

The DS2155 provides a CMI interface for connection to optical transports. This interface is a unipolar 1T2B signal type. Ones are encoded as either a logical 1 or 0 level for the full duration of the clock period. Zeros are encoded as a 0-to-1 transition at the middle of the clock period.

Figure 24-2. CMI Coding

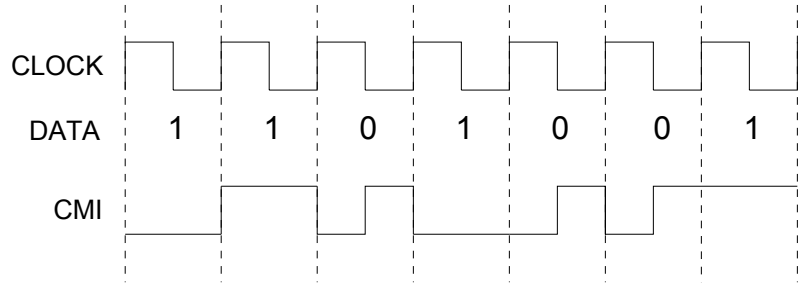

Transmit and receive CMI are enabled through LIC4.7. When this register bit is set, the TTIP pin outputs CMI-coded data at normal levels. This signal can be used to directly drive an optical interface. When CMI is enabled, the user can also use HDB3/B8ZS coding. When this register bit is set, the RTIP pin becomes a unipolar CMI input. The CMI signal is processed to extract and align the clock with data.

24.7 LIU Control Registers

Register Name: **LIC1**
Register Description: **Line Interface Control 1**
Register Address: **78h**

Bit #	7	6	5	4	3	2	1	0
Name	L2	L1	L0	EGL	JAS	JABDS	DJA	TPD
Default	0	0	0	0	0	0	0	0

Bit 0/Transmit Power-Down (TPD)
0 = powers down the transmitter and tri-states the TTIP and TRING pins
1 = normal transmitter operation

Bit 1/Disable Jitter Attenuator (DJA)
0 = jitter attenuator enabled
1 = jitter attenuator disabled

Bit 2/Jitter Attenuator Buffer Depth Select (JABDS)
0 = 128 bits
1 = 32 bits (use for delay-sensitive applications)

Bit 3/Jitter Attenuator Select (JAS)
0 = place the jitter attenuator on the receive side
1 = place the jitter attenuator on the transmit side

Bit 4/Receive Equalizer Gain Limit (EGL). This bit controls the sensitivity of the receive equalizer.

T1 Mode
0 = -36dB (long haul)
1 = -15dB (limited long haul)

E1 Mode
0 = -12dB (short haul)
1 = -43dB (long haul)

Bits 5 to 7/Line Buildout Select (L0 to L2). When using the internal termination, the user needs only to select 000 for 75Ω operation or 001 for 120Ω operation below. This selects the proper voltage levels for 75Ω or 120Ω operation. Using TT0 and TT1 of the LICR4 register, the user can then select the proper internal source termination. Line buildouts 100 and 101 are for backwards compatibility with older products only.

E1 Mode

L2	L1	L0	Application	N (1)	Return Loss	Rt (1) (Ω)
0	0	0	75Ω normal	1:2	NM	0
0	0	1	120Ω normal	1:2	NM	0
1	0	0	75Ω with high return loss*	1:2	21dB	6.2
1	0	1	120Ω with high return loss*	1:2	21dB	11.6

*TT0 and TT1 of LIC4 register must be set to 0 in this configuration.

T1 Mode

L2	L1	L0	Application	N (1)	Return Loss	Rt (1) (Ω)
0	0	0	DSX-1 (0ft to 133ft) / 0dB CSU	1:2	NM	0
0	0	1	DSX-1 (133ft to 266ft)	1:2	NM	0
0	1	0	DSX-1 (266ft to 399ft)	1:2	NM	0
0	1	1	DSX-1 (399ft to 533ft)	1:2	NM	0
1	0	0	DSX-1 (533ft to 655ft)	1:2	NM	0
1	0	1	-7.5dB CSU	1:2	NM	0
1	1	0	-15dB CSU	1:2	NM	0
1	1	1	-22.5dB CSU	1:2	NM	0

Register Name: **TLBC**
Register Description: **Transmit Line Build-Out Control**
Register Address: **7Dh**

Bit #	7	6	5	4	3	2	1	0
Name	-	AGCE	GC5	GC4	GC3	GC2	GC1	GC0
Default	0	0	0	0	0	0	0	0

Bit 0–5 Gain Control Bits 0–5 (GC0–GC5). The GC0 through GC5 bits control the gain setting for the nonautomatic gain mode. Use the tables below for setting the recommended values. The LB (line build-out) column refers to the value in the
L0–L2 bits in LIC1 (Line Interface Control 1) register.

NETWORK MODE	LB	GC5	GC4	GC3	GC2	GC1	GC0
T1, Impedance Match Off	0	1	0	0	1	1	0
	1	0	1	1	0	1	1
	2	0	1	1	0	1	0
	3	1	0	0	0	0	0
	4	1	0	0	1	1	1
	5	1	0	0	1	1	1
	6	0	1	0	0	1	1
	7	1	1	1	1	1	1
T1, Impedance Match On	0	0	1	1	1	1	0
	1	0	1	0	1	0	1
	2	0	1	0	1	0	1
	3	0	1	1	0	1	0
	4	1	0	0	0	1	0
	5	1	0	0	0	0	0
	6	0	0	1	1	0	0
	7	1	1	1	1	1	1
E1, Impedance Match Off	0	1	0	0	0	0	1
	1	1	0	0	0	0	1
	4	1	0	1	0	1	0
	5	1	0	1	0	0	0
E1, Impedance Match On	0	0	1	1	0	1	0
	1	0	1	1	0	1	0

Bit 6/Automatic Gain Control Enable (AGCE).

0 = use Transmit AGC, TLBC bits 0–5 are “don’t care”
1 = do not use Transmit AGC, TLBC bits 0–5 set nominal level

Bit 7/Unused, must be set to zero for proper operation.

Register Name: **LIC2**
Register Description: **Line Interface Control 2**
Register Address: **79h**

Bit #	7	6	5	4	3	2	1	0
Name	ETS	LIRST	IBPV	TUA1	JAMUX	—	SCLD	CLDS
Default	0	0	0	0	0	0	0	0

Bit 0/Custom Line Driver Select (CLDS). Setting this bit to a 1 redefines the operation of the transmit line driver. When this bit is set to a 1 and LIC1.5 = LIC1.6 = LIC1.7 = 0, the device generates a square wave at the TTIP and TRING outputs instead of a normal waveform. When this bit is set to a 1 and LIC1.5 = LIC1.6 = LIC1.7 ≠ 0, the device forces TTIP and TRING outputs to become open-drain drivers instead of their normal push-pull operation. This bit should be set to 0 for normal operation of the device.

Bit 1/Short-Circuit Limit Disable (ETS = 1) (SCLD). Controls the 50mA (RMS) current limiter.
0 = enable 50mA current limiter
1 = disable 50mA current limiter

Bit 2/Unused, must be set to 0 for proper operation

Bit 3/Jitter Attenuator Mux (JAMUX). Controls the source for JACLK.
0 = JACLK sourced from MCLK (2.048MHz or 1.544MHz at MCLK)
1 = JACLK sourced from internal PLL (2.048MHz at MCLK)

Bit 4/Transmit Unframed All Ones (TUA1). The polarity of this bit is set such that the device transmits an all-ones pattern on power-up or device reset. This bit must be set to a 1 to allow the device to transmit data. The transmission of this data pattern is always timed off of the JACLK.
0 = transmit all ones at TTIP and TRING
1 = transmit data normally

Bit 5/Insert BPV (IBPV). A 0-to-1 transition on this bit causes a single BPV to be inserted into the transmit data stream. Once this bit has been toggled from a 0 to a 1, the device waits for the next occurrence of three consecutive 1s to insert the BPV. This bit must be cleared and set again for a subsequent error to be inserted.

Bit 6/Line Interface Reset (LIRST). Setting this bit from a 0 to a 1 initiates an internal reset that resets the clock recovery state machine and recenters the jitter attenuator. Normally this bit is only toggled on power-up. Must be cleared and set again for a subsequent reset.

Bit 7/E1/T1 Select (ETS)
0 = T1 mode selected
1 = E1 mode selected

Register Name: **LIC3**
Register Description: **Line Interface Control 3**
Register Address: **7Ah**

Bit #	7	6	5	4	3	2	1	0
Name	—	TCES	RCES	MM1	MM0	RSCLKE	TSCLKE	TAOZ
Default	0	0	0	0	0	0	0	0

Bit 0/Transmit Alternate Ones and Zeros (TAOZ). Transmit a …101010… pattern (customer disconnect indication signal) at TTIP and TRING. The transmission of this data pattern is always timed off of TCLK.

0 = disabled
1 = enabled

Bit 1/Transmit Synchronization G.703 Clock Enable (TSCLKE)

0 = disable 1.544MHz (T1)/2.048MHz (E1) transmit synchronization clock
1 = enable 1.544MHz (T1)/2.048MHz (E1) transmit synchronization clock

Bit 2/Receive Synchronization G.703 Clock Enable (RSCLKE)

0 = disable 1.544MHz (T1)/2.048MHz (E1) synchronization receive mode
1 = enable 1.544MHz (T1)/2.048MHz (E1) synchronization receive mode

Bits 3 to 4/Monitor Mode (MM0 to MM1)

MM1	MM0	Internal Linear Gain Boost (dB)
0	0	Normal operation (no boost)
0	1	20
1	0	26
1	1	32

Bit 5/Receive-Clock Edge Select (RCES). Selects which RCLKO edge to update RPOSO and RNEGO.

0 = update RPOSO and RNEGO on rising edge of RCLKO
1 = update RPOSO and RNEGO on falling edge of RCLKO

Bit 6/Transmit-Clock Edge Select (TCES). Selects which TCLKI edge to sample TPOSI and TNEGI.

0 = sample TPOSI and TNEGI on falling edge of TCLKI
1 = sample TPOSI and TNEGI on rising edge of TCLKI

Bit 7/Unused, must be set to 0 for proper operation

Register Name: **LIC4**
Register Description: **Line Interface Control 4**
Register Address: **7Bh**

Bit #	7	6	5	4	3	2	1	0
Name	CMIE	CMII	MPS1	MPS0	TT1	TT0	RT1	RT0
Default	0	0	0	0	0	0	0	0

Bits 0, 1/Receive Termination Select (RT0, RT1)

RT1	RT0	Internal Receive-Termination Configuration
0	0	Internal receive-side termination disabled
0	1	Internal receive-side 75Ω enabled
1	0	Internal receive-side 100Ω enabled
1	1	Internal receive-side 120Ω enabled

Bits 2, 3/Transmit Termination Select (TT0, TT1)

TT1	TT0	Internal Transmit-Termination Configuration
0	0	Internal transmit-side termination disabled
0	1	Internal transmit -side 75Ω enabled
1	0	Internal transmit -side 100Ω enabled
1	1	Internal transmit -side 120Ω enabled

Bits 4, 5/MCLK Prescaler for T1 Mode

MCLK (MHz)	MPS1	MPS0	JAMUX (LIC2.3)
1.544	0	0	0
3.088	0	1	0
6.176	1	0	0
12.352	1	1	0
2.048	0	0	1
4.096	0	1	1
8.192	1	0	1
16.384	1	1	1

Bits 4, 5/MCLK Prescaler for E1 Mode

MCLK (MHz)	MPS1	MPS0	JAMUX (LIC2.3)
2.048	0	0	0
4.096	0	1	0
8.192	1	0	0
16.384	1	1	0

Bit 6/CMI Invert (CMII)

0 = CMI normal at TTIP and RTIP
1 = invert CMI signal at TTIP and RTIP

Bit 7/CMI Enable (CMIE)

0 = disable CMI mode
1 = enable CMI mode

Register Name: **INFO2**
Register Description: **Information Register 2**
Register Address: **11h**

Bit #	7	6	5	4	3	2	1	0
Name	BSYNC	BD	TCLE	TOCD	RL3	RL2	RL1	RL0
Default	0	0	0	0	0	0	0	0

Bits 0 to 3/Receive Level Bits (RL0 to RL3). Real-time bits

RL3	RL2	RL1	RL0	Receive Level (dB)
0	0	0	0	Greater than -2.5
0	0	0	1	-2.5 to -5.0
0	0	1	0	-5.0 to -7.5
0	0	1	1	-7.5 to -10.0
0	1	0	0	-10.0 to -12.5
0	1	0	1	-12.5 to -15.0
0	1	1	0	-15.0 to -17.5
0	1	1	1	-17.5 to -20.0
1	0	0	0	-20.0 to -22.5
1	0	0	1	-22.5 to -25.0
1	0	1	0	-25.0 to -27.5
1	0	1	1	-27.5 to -30.0
1	1	0	0	-30.0 to -32.5
1	1	0	1	-32.5 to -35.0
1	1	1	0	-35.0 to -37.5
1	1	1	1	Less than -37.5

NOTE: RL0 through RL3 only indicate the signal range as specified by the EGL bit in LIC1. Example; if EGL = 1 and in T1 mode, RL0 through RL3 will only indicate a signal range of >-2.5dB to –15dB even if the signal is < -15dB.

Bit 4/Transmit Open-Circuit Detect (TOCD). A real-time bit that is set when the device detects that the TTIP and TRING outputs are open-circuited.

Bit 5/Transmit Current-Limit Exceeded (TCLE). A real-time bit that is set when the 50mA (RMS) current limiter is activated, whether the current limiter is enabled or not.

Bit 6/BOC Detected (BD). A real-time bit that is set high when the BOC detector is presently seeing a valid sequence and set low when no BOC is currently being detected.

Bit 7/BERT Real-Time Synchronization Status (BSYNC). Real-time status of the synchronizer (this bit is not latched). This bit is set when the incoming pattern matches for 32 consecutive bit positions. It is cleared when six or more bits out of 64 are received in error. Refer to BSYNC in the BERT status register, SR9, for an interrupt-generating version of this signal.

Register Name: **SR1**
Register Description: **Status Register 1**
Register Address: **16h**

Bit #	7	6	5	4	3	2	1	0
Name	ILUT	TIMER	RSCOS	JALT	LRCL	TCLE	TOCD	LOLITC
Default	0	0	0	0	0	0	0	0

Bit 0/Loss of Line-Interface Transmit-Clock Condition (LOLITC). Set when TCLKI has not transitioned for one channel time. This is a double interrupt bit (Section 6.2).

Bit 1/Transmit Open-Circuit Detect Condition (TOCD). Set when the device detects that the TTIP and TRING outputs are open-circuited. This is a double interrupt bit (Section 6.2).

Bit 2/Transmit Current-Limit Exceeded Condition (TCLE). Set when the 50mA (RMS) current limiter is activated, whether the current limiter is enabled or not. This is a double interrupt bit (Section 6.2).

Bit 3/Line Interface Receive Carrier-Loss Condition (LRCL). Set when the carrier signal is lost. This is a double interrupt bit (Section 6.2).

Bit 4/Jitter Attenuator Limit Trip Event (JALT). Set when the jitter attenuator FIFO reaches to within 4 bits of its useful limit. This bit is cleared when read. Useful for debugging jitter attenuation operation.

Bit 5/Receive Signaling Change-of-State Event (RSCOS). Set when any channel selected by the receive signaling change-of-state interrupt-enable registers (RSCSE1 through RSCSE4) changes signaling state.

Bit 6/Timer Event (TIMER). Follows the error-counter update interval as determined by the ECUS bit in the error-counter configuration register (ERCNT).

T1: set on increments of 1 second or 42ms based on RCLK
E1: set on increments of 1 second or 62.5ms based on RCLK

Bit 7/Input Level Under Threshold (ILUT). This bit is set whenever the input level at RTIP and RRING falls below the threshold set by the value in CCR4.4 through CCR4.7. The level must remain below the programmed threshold for approximately 50ms for this bit to be set. This is a double interrupt bit (Section 6.2).

Register Name: **IMR1**
Register Description: **Interrupt Mask Register 1**
Register Address: **17h**

Bit #	7	6	5	4	3	2	1	0
Name	ILUT	TIMER	RSCOS	JALT	LRCL	TCLE	TOCD	LOLITC
Default	0	0	0	0	0	0	0	0

Bit 0/Loss-of-Transmit Clock Condition (LOLITC)
0 = interrupt masked
1 = interrupt enabled—generates interrupts on rising and falling edges

Bit 1/Transmit Open-Circuit Detect Condition (TOCD)
0 = interrupt masked
1 = interrupt enabled—generates interrupts on rising and falling edges

Bit 2/Transmit Current-Limit Exceeded Condition (TCLE)
0 = interrupt masked
1 = interrupt enabled—generates interrupts on rising and falling edges

Bit 3/Line Interface Receive Carrier-Loss Condition (LRCL)
0 = interrupt masked
1 = interrupt enabled—generates interrupts on rising and falling edges

Bit 4/Jitter Attenuator Limit Trip Event (JALT)
0 = interrupt masked
1 = interrupt enabled

Bit 5/Receive Signaling Change-of-State Event (RSCOS)
0 = interrupt masked
1 = interrupt enabled

Bit 6/Timer Event (TIMER)
0 = interrupt masked
1 = interrupt enabled

Bit 7/Input Level Under Threshold (ILUT)
0 = interrupt masked
1 = interrupt enabled

24.8 Recommended Circuits

Figure 24-3. Software-Selected Termination, Metallic Protection

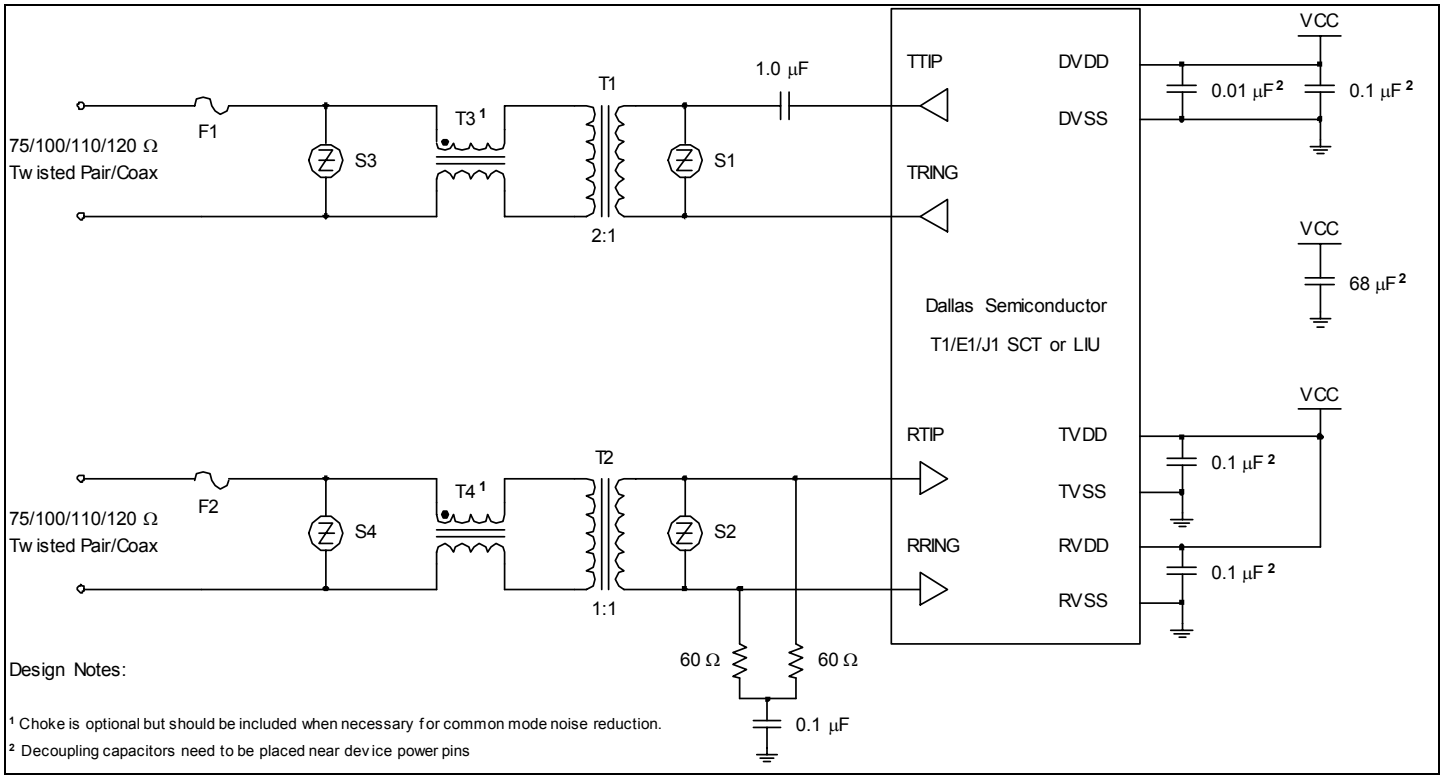

Table 24-A. Component List (Software-Selected Termination, Metallic Protection)

NAME	DESCRIPTION
F1 and F2	1.25A slow blow fuse
S1 and S2	25V (max) transient suppressor
S3 andS4	77V (max) transient suppressor
T1 and T2	Transformer 1:1CT and 1:2CT (3.3V, SMT)
T3 and T4	Dual common-mode choke (SMT)

Note 1: T3 and T4 are optional. For more information, contact the Telecom Support Group at telecom.support@dalsemi.com.

Note 2: The layout from the transformers to the network interface is critical. Traces should be at least 25 mils wide and separated from other circuit lines by at least 150 mils. The area under this portion of the circuit should not contain power planes.

Note 3: Some T1 (never in E1) applications source or sink power from the network-side center taps of the Rx/Tx transformers.

Note 4: A list of transformer part numbers and manufacturers is available by contacting telecom.support@dalsemi.com.

Figure 24-4. Software-Selected Termination, Longitudinal Protection

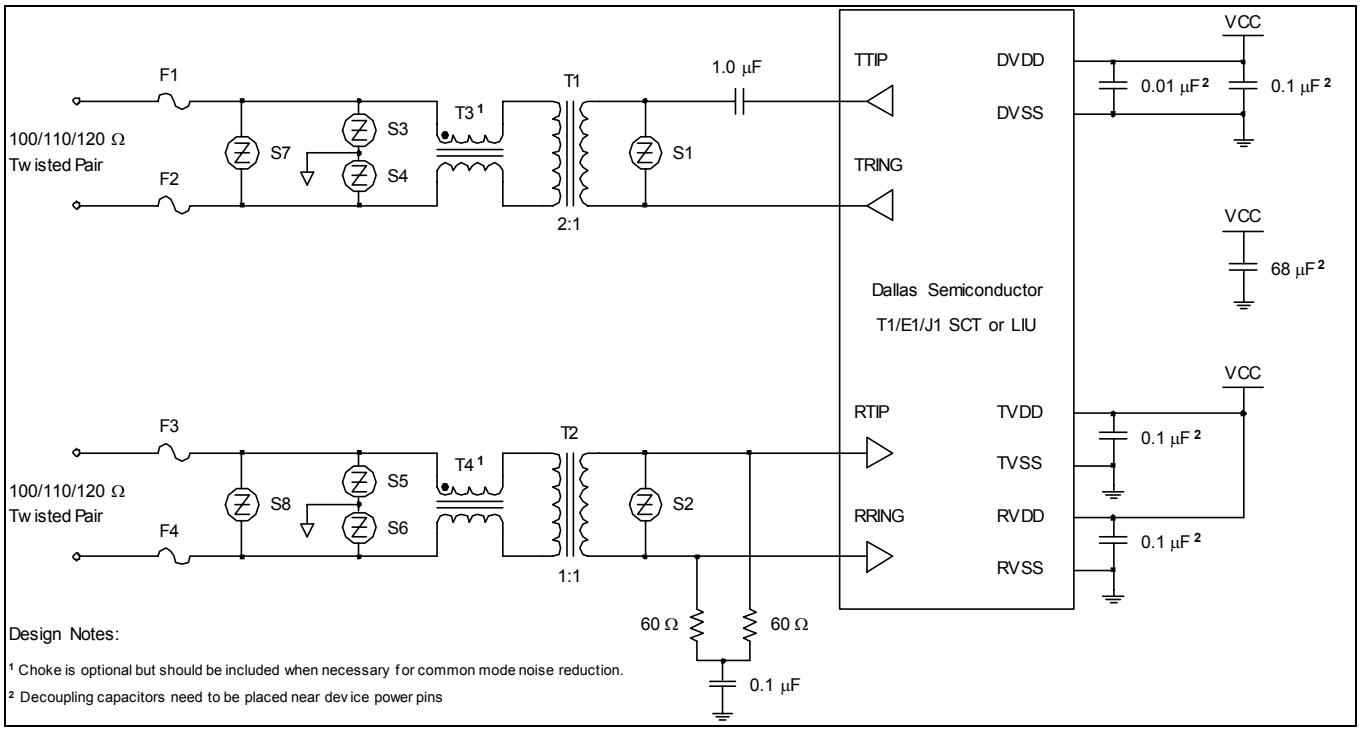

Table 24-B. Component List (Software-Selected Termination, Longitudinal Protection)

NAME	DESCRIPTION
F1 to F4	1.25A slow blow fuse
S1 and S2	25V (max) transient suppressor
S3, S4, S5, S6	180V (max) transient suppressor
S7 and S8	40V (max) transient suppressor
T1 and T2	Transformer 1:1CT and 1:2CT (3.3V, SMT)
T3 and T4	Dual common-mode choke (SMT)

Note 1: T3 and T4 are optional. For more information, contact the Telecom Support Group at telecom.support@dalsemi.com.

Note 2: A list of alternate transformer part numbers and manufacturers is available at telecom.support@dalsemi.com.

Note 3: The layout from the transformers to the network interface is critical. Traces should be at least 25 mils wide and separated from other circuit lines by at least 150 mils. The area under this portion of the circuit should not contain power planes.

Note 4: Some T1 (never in E1) applications source or sink power from the network-side center taps of the Rx/Tx transformers.

Note 5: The ground trace connected to the S2/S3 pair and the S4/S5 pair should be at least 50 mils wide to conduct the extra current from a longitudinal power-cross event.

24.9 Component Specifications

Table 24-C. Transformer Specifications

SPECIFICATION	RECOMMENDED VALUE
Turns Ratio 3.3V Applications	1:1 (receive) and 1:2 (transmit) ±2%
Primary Inductance	600µH (min)
Leakage Inductance	1.0µH (max)
Intertwining Capacitance	40pF (max)
Transmit Transformer DC Resistance Primary (Device Side) Secondary	 1.0Ω (max) 2.0Ω (max)
Receive Transformer DC Resistance Primary (Device Side) Secondary	 1.2Ω (max) 1.2Ω (max)

Figure 24-5. E1 Transmit Pulse Template

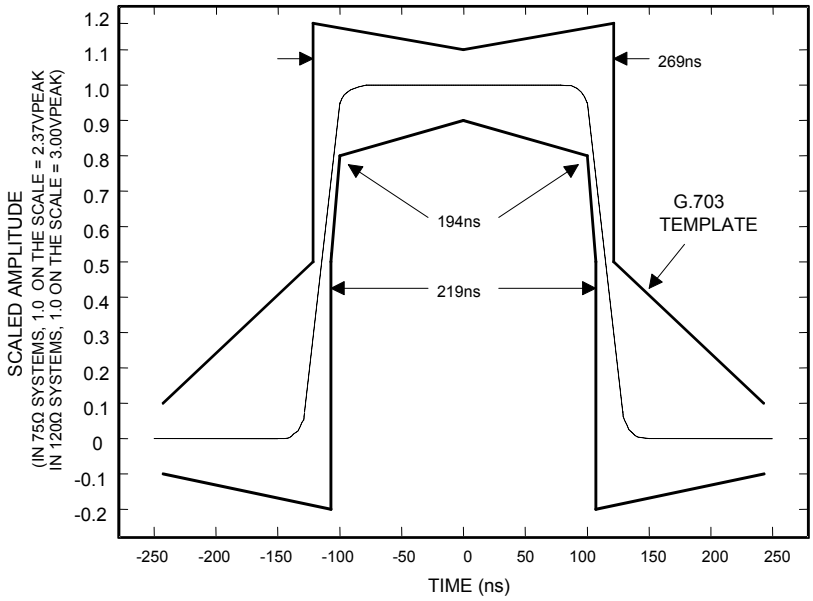

Figure 24-6. T1 Transmit Pulse Template

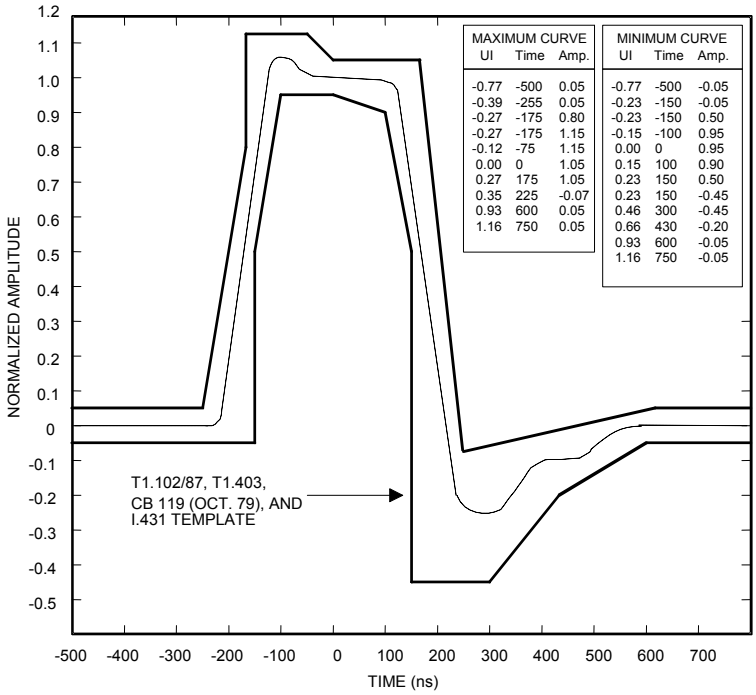

MAXIMUM CURVE		
UI	Time	Amp.
-0.77	-500	0.05
-0.39	-255	0.05
-0.27	-175	0.80
-0.27	-175	1.15
-0.12	-75	1.15
0.00	0	1.05
0.27	175	1.05
0.35	225	-0.07
0.93	600	0.05
1.16	750	0.05

MINIMUM CURVE		
UI	Time	Amp.
-0.77	-500	-0.05
-0.23	-150	-0.05
-0.23	-150	0.50
-0.15	-100	0.95
0.00	0	0.95
0.15	100	0.90
0.23	150	0.50
0.23	150	-0.45
0.46	300	-0.45
0.66	430	-0.20
0.93	600	-0.05
1.16	750	-0.05

Figure 24-7. Jitter Tolerance

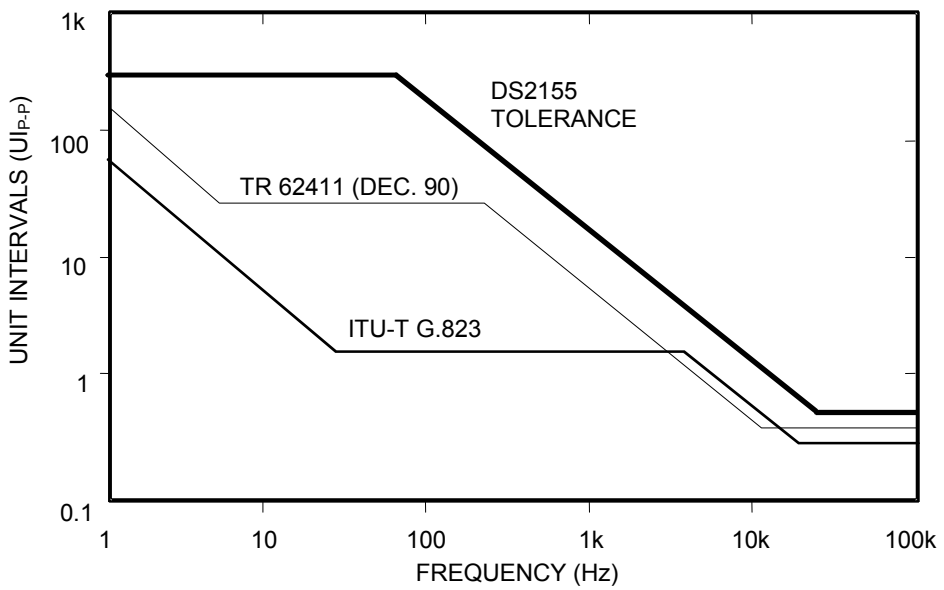

Figure 24-8. Jitter Tolerance (E1 Mode)

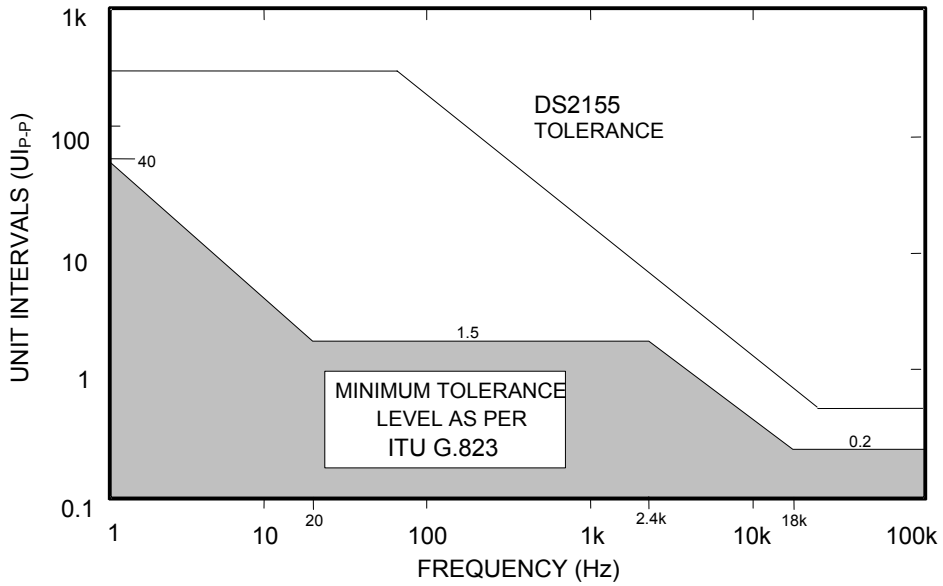

Figure 24-9. Jitter Attenuation (T1 Mode)

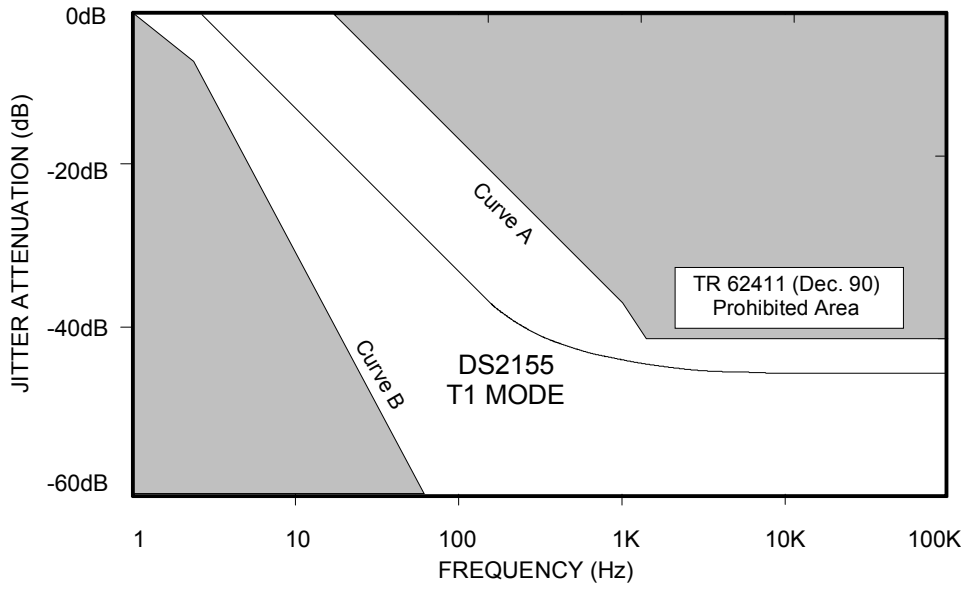

Figure 24-10. Jitter Attenuation (E1 Mode)

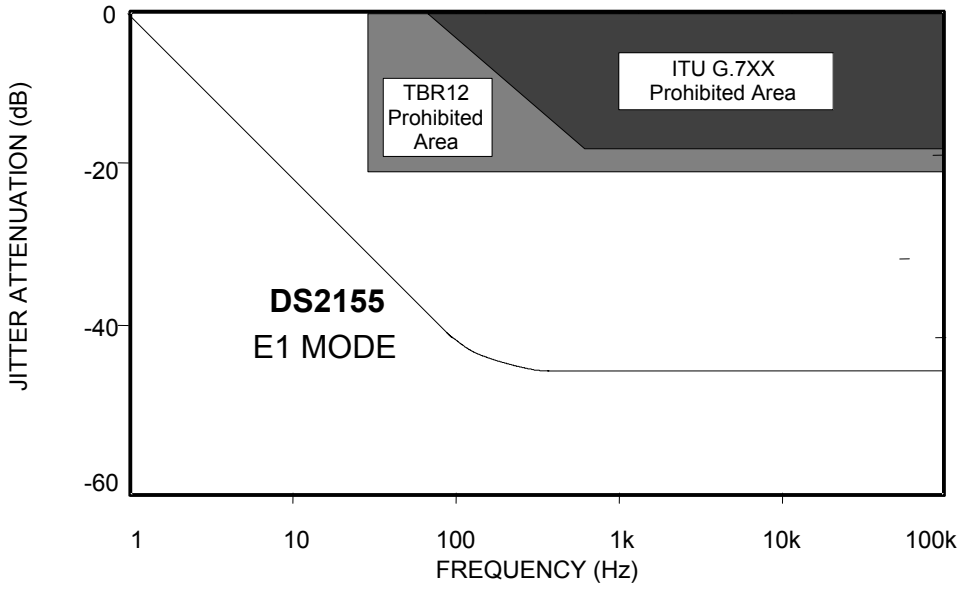

Figure 24-11. Optional Crystal Connections

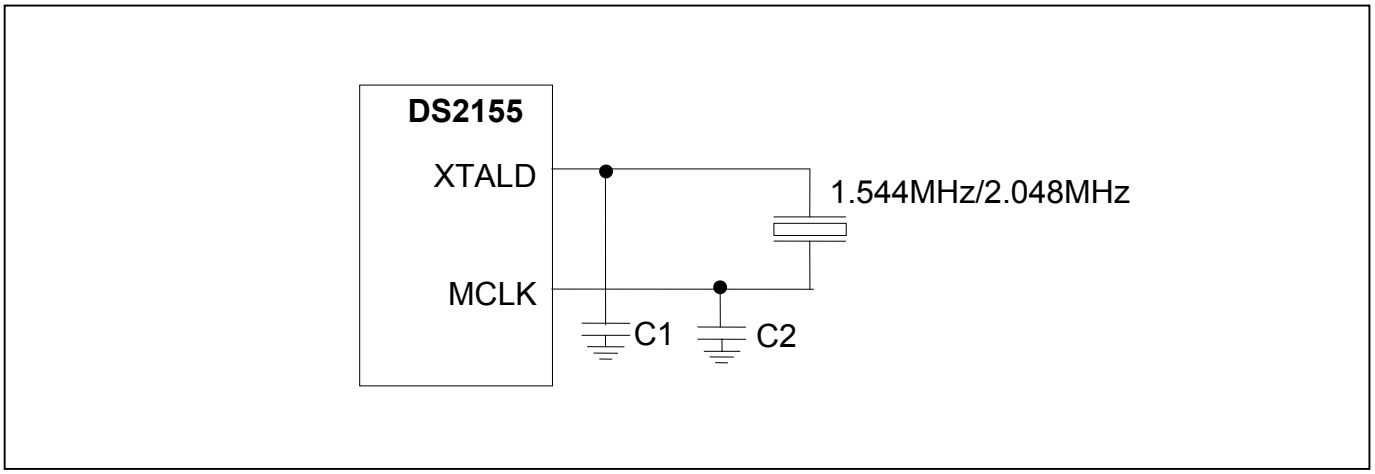

Note 1: C1 and C2 should be 5pF lower than two times the nominal loading capacitance of the crystal to adjust for the input capacitance of the DS2155.

25. PROGRAMMABLE IN-BAND LOOP CODE GENERATION AND DETECTION

The DS2155 has the ability to generate and detect a repeating bit pattern from one to eight bits or 16 bits in length. **This function is available only in T1 mode.** To transmit a pattern, the user loads the pattern into the transmit code-definition registers (TCD1 and TCD2) and selects the proper length of the pattern by setting the TC0 and TC1 bits in the in-band code control (IBCC) register. When generating a 1-, 2-, 4-, 8-, or 16-bit pattern, both transmit code-definition registers must be filled with the proper code. Generation of a 3-, 5-, 6-, and 7-bit pattern only requires TCD1 to be filled. Once this is accomplished, the pattern is transmitted as long as the TLOOP control bit (T1CCR1.0) is enabled. Normally (unless the transmit formatter is programmed to not insert the F-bit position) the framer overwrites the repeating pattern once every 193 bits to send the F-bit position.

For example, to transmit the standard "loop-up" code for CSUs, which is a repeating pattern of ...10000100001... , set TCD1 = 80h, IBCC = 0, and T1CCR1.0 = 1.

The framer has three programmable pattern detectors. Typically two of the detectors are used for "loop-up" and "loop-down" code detection. The user programs the codes to be detected in the receive up-code definition (RUPCD1 and RUPCD2) registers and the receive down-code definition (RDNCD1 and RDNCD2) registers, and the length of each pattern is selected through the IBCC register. There is a third detector (spare) that is defined and controlled through the RSCD1/RSCD2 and RSCC registers. When detecting a 16-bit pattern, both receive code-definition registers are used together to form a 16-bit register. For 8-bit patterns, both receive code-definition registers are filled with the same value. Detection of a 1-, 2-, 3-, 4-, 5-, 6-, and 7-bit pattern only requires the first receive code-definition register to be filled. The framer detects repeating pattern codes in both framed and unframed circumstances with bit error rates as high as 10E-2. The detectors are capable of handling both F-bit inserted and F-bit overwrite patterns. Writing the least significant byte of the receive code-definition register resets the integration period for that detector. The code detector has a nominal integration period of 36ms. Hence, after about 36ms of receiving a valid code, the proper status bit (LUP at SR3.5, LDN at SR3.6, and LSPARE at SR3.7) is set to a 1. Normally codes are sent for a period of five seconds. It is recommended that the software poll the framer every 50ms to 1000ms until five seconds has elapsed to ensure the code is continuously present.

Register Name: **IBCC**
Register Description: **In-Band Code Control Register**
Register Address: **B6h**

Bit #	7	6	5	4	3	2	1	0
Name	TC1	TC0	RUP2	RUP1	RUP0	RDN2	RDN1	RDN0
Default	0	0	0	0	0	0	0	0

Bits 0 to 2/Receive Down-Code Length Definition Bits (RDN0 to RDN2)

RDN2	RDN1	RDN0	Length Selected (bits)
0	0	0	1
0	0	1	2
0	1	0	3
0	1	1	4
1	0	0	5
1	0	1	6
1	1	0	7
1	1	1	8/16

Bits 3 to 5/Receive Up-Code Length Definition Bits (RUP0 to RUP2)

RUP2	RUP1	RUP0	Length Selected (bits)
0	0	0	1
0	0	1	2
0	1	0	3
0	1	1	4
1	0	0	5
1	0	1	6
1	1	0	7
1	1	1	8/16

Bits 6, 7/Transmit Code Length Definition Bits (TC0 to TC1)

TC1	TC0	Length Selected (bits)
0	0	5
0	1	6/3
1	0	7
1	1	16/8/4/2/1

Register Name: **TCD1**
Register Description: **Transmit Code-Definition Register 1**
Register Address: **B7h**

Bit #	7	6	5	4	3	2	1	0
Name	C7	C6	C5	C4	C3	C2	C1	C0
Default	0	0	0	0	0	0	0	0

Bit 0/Transmit Code-Definition Bit 0 (C0). A don't care if a 5-, 6-, or 7-bit length is selected.

Bit 1/Transmit Code-Definition Bit 1 (C1). A don't care if a 5-bit or 6-bit length is selected.

Bit 2/Transmit Code-Definition Bit 2 (C2). A don't care if a 5-bit length is selected.

Bits 3–6/Transmit Code-Definition Bits 3–6 (C3–C6)

Bit 7/Transmit Code-Definition Bit 7 (C7). First bit of the repeating pattern.

Register Name: **TCD2**
Register Description: **Transmit Code Definition Register 2**
Register Address: **B8h**

Bit #	7	6	5	4	3	2	1	0
Name	C7	C6	C5	C4	C3	C2	C1	C0
Default	0	0	0	0	0	0	0	0

Least significant byte of 16 bit codes.

Bits 0–7/Transmit Code-Definition Bits 0–7 (C0–C7). A don't care if a 5-, 6-, or 7-bit length is selected.

Register Name: **RUPCD1**
Register Description: **Receive Up-Code Definition Register 1**
Register Address: **B9h**

Bit #	7	6	5	4	3	2	1	0
Name	C7	C6	C5	C4	C3	C2	C1	C0
Default	0	0	0	0	0	0	0	0

Note: Writing this register resets the detector's integration period.

Bit 0/Receive Up-Code Definition Bits 0 (C0). A don't care if a 1-bit to 7-bit length is selected.

Bit 1/Receive Up-Code Definition Bit 1 (C1). A don't care if a 1-bit to 6-bit length is selected.

Bit 2/Receive Up-Code Definition Bit 2 (C2). A don't care if a 1-bit to 5-bit length is selected.

Bit 3/Receive Up-Code Definition Bit 3 (C3). A don't care if a 1-bit to 4-bit length is selected.

Bit 4/Receive Up-Code Definition Bit 4 (C4). A don't care if a 1-bit to 3-bit length is selected.

Bit 5/Receive Up-Code Definition Bit 5 (C5). A don't care if a 1-bit or 2-bit length is selected.

Bit 6/Receive Up-Code Definition Bit 6 (C6). A don't care if a 1-bit length is selected.

Bit 7/Receive Up-Code Definition Bit 7 (C7). First bit of the repeating pattern.

Register Name: **RUPCD2**
Register Description: **Receive Up-Code Definition Register 2**
Register Address: **BAh**

Bit #	7	6	5	4	3	2	1	0
Name	C7	C6	C5	C4	C3	C2	C1	C0
Default	0	0	0	0	0	0	0	0

Bits 0–7/Receive Up-Code Definition Bits 0–7 (C0–C7). A don't care if a 1-bit to 7-bit length is selected.

Register Name: **RDNCD1**
Register Description: **Receive Down-Code Definition Register 1**
Register Address: **BBh**

Bit #	7	6	5	4	3	2	1	0
Name	C7	C6	C5	C4	C3	C2	C1	C0
Default	0	0	0	0	0	0	0	0

Note: Writing this register resets the detector's integration period.

Bit 0/Receive Down-Code Definition Bit 0 (C0). A don't care if a 1-bit to 7-bit length is selected.

Bit 1/Receive Down-Code Definition Bit 1 (C1). A don't care if a 1-bit to 6-bit length is selected.

Bit 2/Receive Down-Code Definition Bit 2 (C2). A don't care if a 1-bit to 5-bit length is selected.

Bit 3/Receive Down-Code Definition Bit 3 (C3). A don't care if a 1-bit to 4-bit length is selected.

Bit 4/Receive Down-Code Definition Bit 4 (C4). A don't care if a 1-bit to 3-bit length is selected.

Bit 5/Receive Down-Code Definition Bit 5 (C5). A don't care if a 1-bit or 2-bit length is selected.

Bit 6/Receive Down-Code Definition Bit 6 (C6). A don't care if a 1-bit length is selected.

Bit 7/Receive Down-Code Definition Bit 7 (C7). First bit of the repeating pattern.

Register Name: **RDNCD2**
Register Description: **Receive Down-Code Definition Register 2**
Register Address: **BCh**

Bit #	7	6	5	4	3	2	1	0
Name	C7	C6	C5	C4	C3	C2	C1	C0
Default	0	0	0	0	0	0	0	0

Bits 0–7/Receive Down-Code Definition Bits 0–7 (C0–C7). A don't care if a 1-bit to 7-bit length is selected.

Register Name: **RSCC**
Register Description: **In-Band Receive Spare Control Register**
Register Address: **BDh**

Bit #	7	6	5	4	3	2	1	0
Name	—	—	—	—	—	RSC2	RSC1	RSC0
Default	0	0	0	0	0	0	0	0

Bits 0 to 2/Receive Spare Code Length Definition Bits (RSC0 to RSC2)

RSC2	RSC1	RSC0	Length Selected (bits)
0	0	0	1
0	0	1	2
0	1	0	3
0	1	1	4
1	0	0	5
1	0	1	6
1	1	0	7
1	1	1	8/16

Bits 3 to 7/Unused, must be set to 0 for proper operation

Register Name: **RSCD1**
Register Description: **Receive Spare-Code Definition Register 1**
Register Address: **BEh**

Bit #	7	6	5	4	3	2	1	0
Name	C7	C6	C5	C4	C3	C2	C1	C0
Default	0	0	0	0	0	0	0	0

Note: Writing this register resets the detector's integration period.

Bit 0/Receive Spare-Code Definition Bit 0 (C0). A don't care if a 1-bit to 7-bit length is selected.

Bit 1/Receive Spare-Code Definition Bit 1 (C1). A don't care if a 1-bit to 6-bit length is selected.

Bit 2/Receive Spare-Code Definition Bit 2 (C2). A don't care if a 1-bit to 5-bit length is selected.

Bit 3/Receive Spare-Code Definition Bit 3 (C3). A don't care if a 1-bit to 4-bit length is selected.

Bit 4/Receive Spare-Code Definition Bit 4 (C4). A don't care if a 1-bit to 3-bit length is selected.

Bit 5/Receive Spare-Code Definition Bit 5 (C5). A don't care if a 1-bit or 2-bit length is selected.

Bit 6/Receive Spare-Code Definition Bit 6 (C6). A don't care if a 1-bit length is selected.

Bit 7/Receive Spare-Code Definition Bit 7 (C7). First bit of the repeating pattern.

Register Name: **RSCD2**
Register Description: **Receive Spare Code Definition Register 2**
Register Address: **BFh**

Bit #	7	6	5	4	3	2	1	0
Name	C7	C6	C5	C4	C3	C2	C1	C0
Default	0	0	0	0	0	0	0	0

Bits 0–7/Receive Spare-Code Definition Bits 0–7 (C0–C7). A don't care if a 1-bit to 7-bit length is selected.

26. BERT FUNCTION

The BERT block can generate and detect pseudorandom and repeating bit patterns. It is used to test and stress data communication links, and it is capable of generating and detecting the following patterns:

- The pseudorandom patterns 2E7, 2E11, 2E15, and QRSS
- A repetitive pattern from 1 to 32 bits in length
- Alternating (16-bit) words that flip every 1 to 256 words
- Daly pattern

The BERT receiver has a 32-bit bit counter and a 24-bit error counter. The BERT receiver reports three events: a change in receive synchronizer status, a bit error being detected, and if either the bit counter or the error counter overflows. Each of these events can be masked within the BERT function through the BERT control register 1 (BC1). If the software detects that the BERT has reported an event, then the software must read the BERT information register (BIR) to determine which event(s) has occurred. To activate the BERT block, the host must configure the BERT mux through the BIC register.

26.1 Status

SR9 contains the status information on the BERT function. The host can be alerted through this register when there is a BERT change-of-state. A major change-of-state is defined as either a change in the receive synchronization (i.e., the BERT has gone into or out of receive synchronization), a bit error has been detected, or an overflow has occurred in either the bit counter or the error counter. The host must read status register 9 (SR9) to determine the change-of-state.

26.2 Mapping

The BERT function can be assigned to the network direction or backplane direction through the direction control bit in the BIC register (BIC.1). See Figure 26-1 and Figure 26-2. The BERT also can be assigned on a per-channel basis. The BERT transmit control selector (BTCS) and BERT receive control selector (BRCS) bits of the per-channel pointer register (PCPR) are used to map the BERT function into time slots of the transmit and receive data streams. In T1 mode, the user can enable mapping into the F-bit position for the transmit and receive directions through the RFUS and TFUS bits in the BERT interface control (BIC) register.

Figure 26-1. Simplified Diagram of BERT in Network Direction

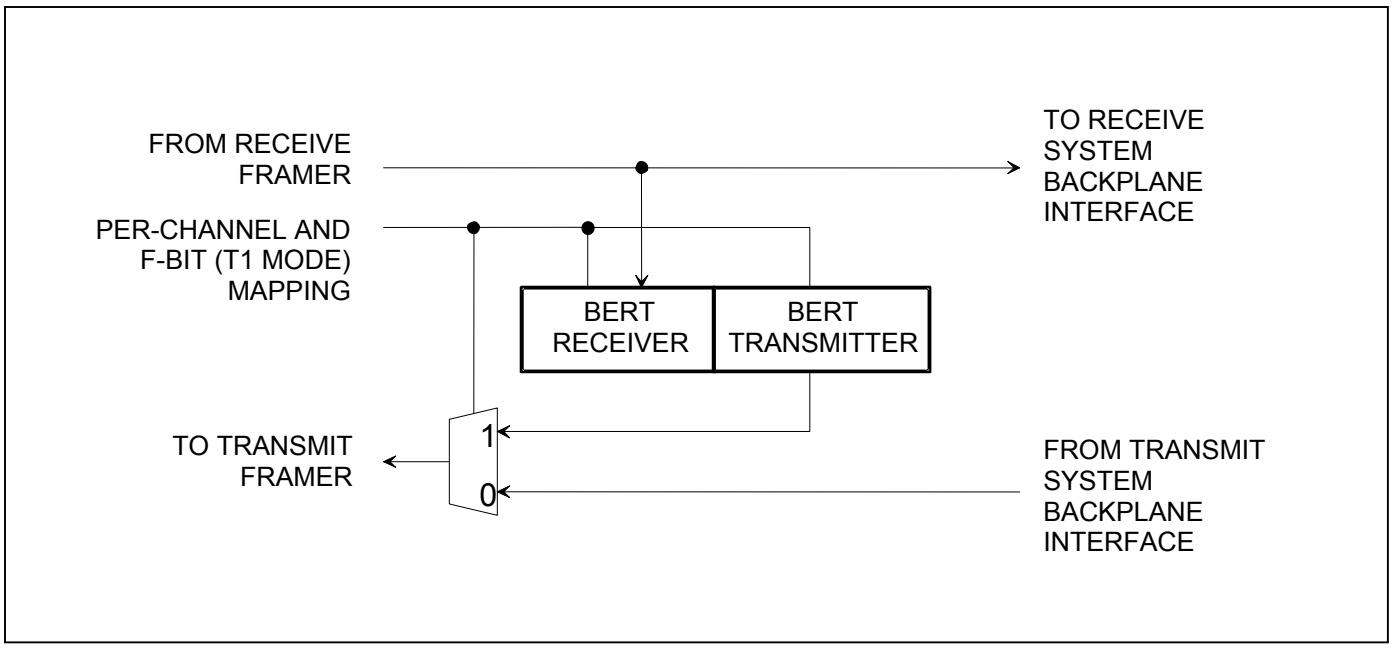

Figure 26-2. Simplified Diagram of BERT in Backplane Direction

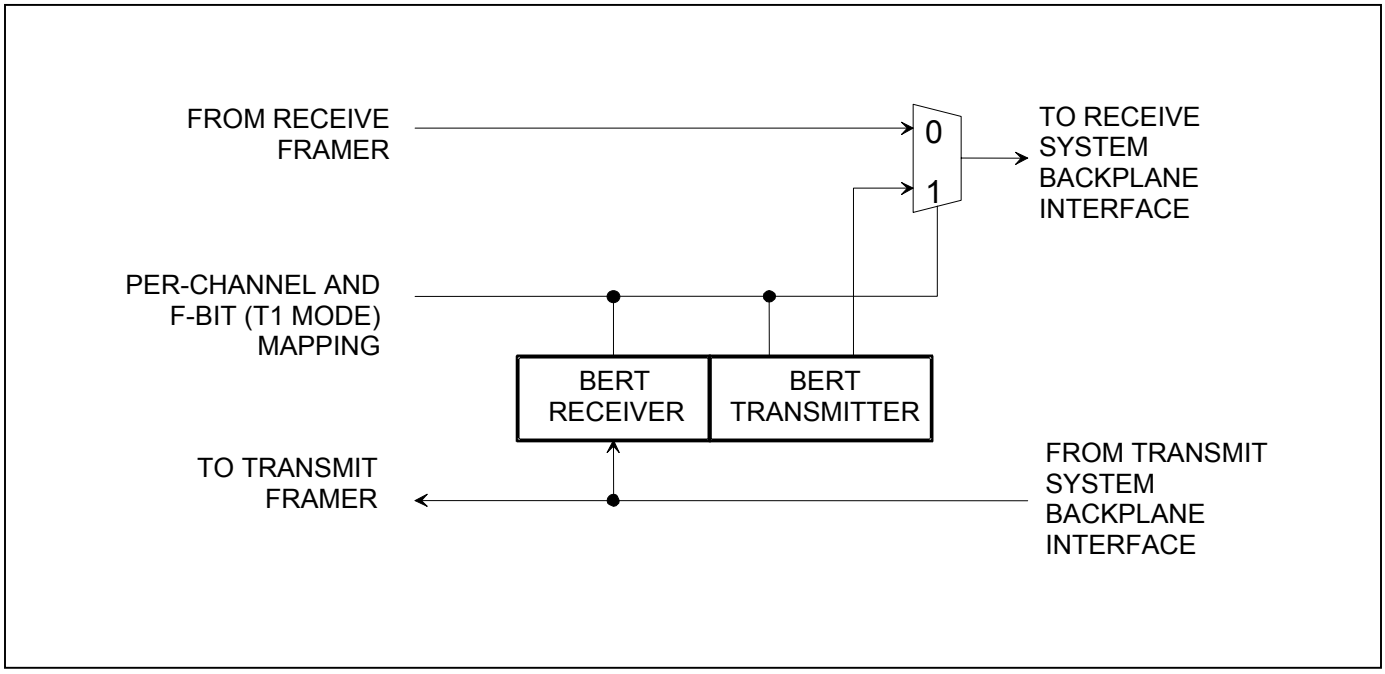

26.3 BERT Register Descriptions

Register Name: **BC1**
Register Description: **BERT Control Register 1**
Register Address: **E0h**

Bit #	7	6	5	4	3	2	1	0
Name	TC	TINV	RINV	PS2	PS1	PS0	LC	RESYNC
Default	0	0	0	0	0	0	0	0

Bit 0/Force Resynchronization (RESYNC). A low-to-high transition forces the receive BERT synchronizer to resynchronize to the incoming data stream. This bit should be toggled from low to high whenever the host wishes to acquire synchronization on a new pattern. Must be cleared and set again for a subsequent resynchronization.

Bit 1/Load Bit and Error Counters (LC). A low-to-high transition latches the current bit and error counts into registers BBC1/BBC2/BBC3/BBC4 and BEC1/BEC2/BEC3 and clears the internal count. This bit should be toggled from low to high whenever the host wishes to begin a new acquisition period. Must be cleared and set again for subsequent loads.

Bits 2 to 4/Pattern Select Bits (PS0 to PS2)

PS2	PS1	PS0	Pattern Definition
0	0	0	Pseudorandom 2E7 - 1
0	0	1	Pseudorandom 2E11 - 1
0	1	0	Pseudorandom 2E15 - 1
0	1	1	Pseudorandom pattern QRSS. A 2^{20} - 1 pattern with 14 consecutive zero restrictions.
1	0	0	Repetitive pattern
1	0	1	Alternating word pattern
1	1	0	Modified 55 octet (Daly) pattern. The Daly pattern is a repeating 55 octet pattern that is byte-aligned into the active DS0 time slots. The pattern is defined in an ATIS (Alliance for Telecommunications Industry Solutions) Committee T1 Technical Report Number 25 (November 1993).
1	1	1	Pseudorandom 2E9 - 1

Bit 5/Receive Invert-Data Enable (RINV)
0 = do not invert the incoming data stream
1 = invert the incoming data stream

Bit 6/Transmit Invert-Data Enable (TINV)
0 = do not invert the outgoing data stream
1 = invert the outgoing data stream

Bit 7/Transmit Pattern Load (TC). A low-to-high transition loads the pattern generator with the pattern that is to be generated. This bit should be toggled from low to high whenever the host wishes to load a new pattern. Must be cleared and set again for subsequent loads.

Register Name: **BC2**
Register Description: **BERT Control Register 2**
Register Address: **E1h**

Bit #	7	6	5	4	3	2	1	0
Name	EIB2	EIB1	EIB0	SBE	RPL3	RPL2	RPL1	RPL0
Default	0	0	0	0	0	0	0	0

Bits 0 to 3/Repetitive Pattern Length Bit 3 (RPL0 to RPL3). RPL0 is the LSB and RPL3 is the MSB of a nibble that describes how long the repetitive pattern is. The valid range is 17 (0000) to 32 (1111). These bits are ignored if the receive BERT is programmed for a pseudorandom pattern. To create repetitive patterns fewer than 17 bits in length, the user must set the length to an integer number of the desired length that is less than or equal to 32. For example, to create a 6-bit pattern, the user can set the length to 18 (0001) or to 24 (0111) or to 30 (1101).

Length (bits)	RPL3	RPL2	RPL1	RPL0
17	0	0	0	0
18	0	0	0	1
19	0	0	1	0
20	0	0	1	1
21	0	1	0	0
22	0	1	0	1
23	0	1	1	0
24	0	1	1	1
25	1	0	0	0
26	1	0	0	1
27	1	0	1	0
28	1	0	1	1
29	1	1	0	0
30	1	1	0	1
31	1	1	1	0
32	1	1	1	1

Bit 4/Single Bit-Error Insert (SBE). A low-to-high transition creates a single-bit error. Must be cleared and set again for a subsequent bit error to be inserted.

Bits 5 to 7/Error Insert Bits 0 to 2 (EIB0 to EIB2). Automatically inserts bit errors at the prescribed rate into the generated data pattern. Can be used for verifying error-detection features.

EIB2	EIB1	EIB0	Error Rate Inserted
0	0	0	No errors automatically inserted
0	0	1	10E-1
0	1	0	10E-2
0	1	1	10E-3
1	0	0	10E-4
1	0	1	10E-5
1	1	0	10E-6
1	1	1	10E-7

Register Name: **SR9**
Register Description: **Status Register 9**
Register Address: **26h**

Bit #	7	6	5	4	3	2	1	0
Name	—	BBED	BBCO	BEC0	BRA1	BRA0	BRLOS	BSYNC
Default	0	0	0	0	0	0	0	0

Bit 0/BERT in Synchronization Condition (BSYNC). Set when the incoming pattern matches for 32 consecutive bit positions. Refer to BSYNC in the INFO2 register for a real-time version of this bit. This is a double interrupt bit (Section 6.2).

Bit 1/BERT Receive Loss-of-Synchronization Condition (BRLOS). A latched bit that is set whenever the receive BERT begins searching for a pattern. Once synchronization is achieved, this bit remains set until read. This is a double interrupt bit (Section 6.2).

Bit 2/BERT Receive All-Zeros Condition (BRA0). A latched bit that is set when 32 consecutive 0s are received. Allowed to be cleared once a 1 is received. This is a double interrupt bit (Section 6.2).

Bit 3/BERT Receive All-Ones Condition (BRA1). A latched bit that is set when 32 consecutive 1s are received. Allowed to be cleared once a 0 is received. This is a double interrupt bit (Section 6.2).

Bit 4/BERT Error-Counter Overflow (BECO) Event (BECO). A latched bit that is set when the 24-bit BERT error counter (BEC) overflows. Cleared when read and is not set again until another overflow occurs.

Bit 5/BERT Bit-Counter Overflow Event (BBCO). A latched bit that is set when the 32-bit BERT bit counter (BBC) overflows. Cleared when read and is not set again until another overflow occurs.

Bit 6/BERT Bit-Error Detected (BED) Event (BBED). A latched bit that is set when a bit error is detected. The receive BERT must be in synchronization for it to detect bit errors. Cleared when read.

Register Name: **IMR9**
Register Description: **Interrupt Mask Register 9**
Register Address: **27h**

Bit #	7	6	5	4	3	2	1	0
Name	—	BBED	BBCO	BEC0	BRA1	BRA0	BRLOS	BSYNC
Default	0	0	0	0	0	0	0	0

Bit 0/BERT in Synchronization Condition (BSYNC)
0 = interrupt masked
1 = interrupt enabled—interrupts on rising and falling edges

Bit 1/Receive Loss-of-Synchronization Condition (BRLOS)
0 = interrupt masked
1 = interrupt enabled—interrupts on rising and falling edges

Bit 2/Receive All-Zeros Condition (BRA0)
0 = interrupt masked
1 = interrupt enabled—interrupts on rising and falling edges

Bit 3/Receive All-Ones Condition (BRA1)
0 = interrupt masked
1 = interrupt enabled—interrupts on rising and falling edges

Bit 4/BERT Error-Counter Overflow Event (BECO)
0 = interrupt masked
1 = interrupt enabled

Bit 5/BERT Bit-Counter Overflow Event (BBCO)
0 = interrupt masked
1 = interrupt enabled

Bit 6/Bit-Error Detected Event (BBED)
0 = interrupt masked
1 = interrupt enabled

BERT Alternating Word-Count Rate. When the BERT is programmed in the alternating word mode, the words repeat for the count loaded into this register then flip to the other word and again repeat for the number of times loaded into this register.

Register Name: **BAWC**
Register Description: **BERT Alternating Word-Count Rate**
Register Address: **DBh**

Bit #	7	6	5	4	3	2	1	0
Name	ACNT7	ACNT6	ACNT5	ACNT4	ACNT3	ACNT2	ACNT1	ACNT0
Default	0	0	0	0	0	0	0	0

Bits 0 to 7/Alternating Word-Count Rate Bits 0 to 7 (ACNT0 to ACNT7). ACNT0 is the LSB of the 8-bit alternating word-count rate counter.

26.4 BERT Repetitive Pattern Set

These registers must be properly loaded for the BERT to generate and synchronize to a repetitive pattern, a pseudorandom pattern, alternating word pattern, or a Daly pattern. For a repetitive pattern that is fewer than 32 bits, the pattern should be repeated so that all 32 bits are used to describe the pattern. For example, if the pattern was the repeating 5-bit pattern …01101… (where the rightmost bit is the one sent first and received first), then BRP1 should be loaded with ADh, BRP2 with B5h, BRP3 with D6h, and BRP4 with 5Ah. For a pseudorandom pattern, all four registers should be loaded with all 1s (i.e., FFh). For an alternating word pattern, one word should be placed into BRP1 and BRP2 and the other word should be placed into BRP3 and BRP4. For example, if the DDS stress pattern "7E" is to be described, the user would place 00h in BRP1, 00h in BRP2, 7Eh in BRP3, and 7Eh in BRP4 and the alternating word counter would be set to 50 (decimal) to allow 100 bytes of 00h followed by 100 bytes of 7Eh to be sent and received.

Register Name: **BRP1**
Register Description: **BERT Repetitive Pattern Set Register 1**
Register Address: **DCh**

Bit #	7	6	5	4	3	2	1	0
Name	RPAT7	RPAT6	RPAT5	RPAT4	RPAT3	RPAT2	RPAT1	RPAT0
Default	0	0	0	0	0	0	0	0

Bits 0 to 7/BERT Repetitive Pattern Set Bits 0 to 7 (RPAT0 to RPAT7). RPAT0 is the LSB of the 32-bit repetitive pattern set.

Register Name: **BRP2**
Register Description: **BERT Repetitive Pattern Set Register 2**
Register Address: **DDh**

Bit #	7	6	5	4	3	2	1	0
Name	RPAT15	RPAT14	RPAT13	RPAT12	RPAT11	RPAT10	RPAT9	RPAT8
Default	0	0	0	0	0	0	0	0

Bits 0 to 7/BERT Repetitive Pattern Set Bits 8 to 15 (RPAT8 to RPAT15)

Register Name: **BRP3**
Register Description: **BERT Repetitive Pattern Set Register 3**
Register Address: **DEh**

Bit #	7	6	5	4	3	2	1	0
Name	RPAT23	RPAT22	RPAT21	RPAT20	RPAT19	RPAT18	RPAT17	RPAT16
Default	0	0	0	0	0	0	0	0

Bits 0 to 7/BERT Repetitive Pattern Set Bits 16 to 23 (RPAT16 to RPAT23)

Register Name: **BRP4**
Register Description: **BERT Repetitive Pattern Set Register 4**
Register Address: **DFh**

Bit #	7	6	5	4	3	2	1	0
Name	RPAT31	RPAT30	RPAT29	RPAT28	RPAT27	RPAT26	RPAT25	RPAT24
Default	0	0	0	0	0	0	0	0

Bits 0 to 7/BERT Repetitive Pattern Set Bits 24 to 31 (RPAT24 to RPAT31). RPAT31 is the LSB of the 32-bit repetitive pattern set.

26.5 BERT Bit Counter

Once BERT has achieved synchronization, this 32-bit counter increments for each data bit (i.e., clock) received. Toggling the LC control bit in BC1 can clear this counter. This counter saturates when full and sets the BBCO status bit.

Register Name: **BBC1**
Register Description: **BERT Bit Count Register 1**
Register Address: **E3h**

Bit #	7	6	5	4	3	2	1	0
Name	BBC7	BBC6	BBC5	BBC4	BBC3	BBC2	BBC1	BBC0
Default	0	0	0	0	0	0	0	0

Bits 0 to 7/BERT Bit Counter Bits 0 to 7 (BBC0 to BBC7). BBC0 is the LSB of the 32-bit counter.

Register Name: **BBC2**
Register Description: **BERT Bit Count Register 2**
Register Address: **E4h**

Bit #	7	6	5	4	3	2	1	0
Name	BBC15	BBC14	BBC13	BBC12	BBC11	BBC10	BBC9	BBC8
Default	0	0	0	0	0	0	0	0

Bits 0 to 7/BERT Bit Counter Bits 8 to 15 (BBC8 to BBC15)

Register Name: **BBC3**
Register Description: **BERT Bit Count Register 3**
Register Address: **E5h**

Bit #	7	6	5	4	3	2	1	0
Name	BBC23	BBC22	BBC21	BBC20	BBC19	BBC18	BBC17	BBC16
Default	0	0	0	0	0	0	0	0

Bits 0 to 7/BERT Bit Counter Bits 16 to 23 (BBC16 to BBC23)

Register Name: **BBC4**
Register Description: **BERT Bit Count Register 4**
Register Address: **E6h**

Bit #	7	6	5	4	3	2	1	0
Name	BBC31	BBC30	BBC29	BBC28	BBC27	BBC26	BBC25	BBC24
Default	0	0	0	0	0	0	0	0

Bits 0 to 7/BERT Bit Counter Bits 24 to 31 (BBC24 to BBC31). BBC31 is the MSB of the 32-bit counter.

26.6 BERT Error Counter

Once BERT has achieved synchronization, this 24-bit counter increments for each data bit received in error. Toggling the LC control bit in BC1 can clear this counter. This counter saturates when full and sets the BECO status bit.

Register Name: **BEC1**
Register Description: **BERT Error-Count Register 1**
Register Address: **E7h**

Bit #	7	6	5	4	3	2	1	0
Name	EC7	EC6	EC5	EC4	EC3	EC2	EC1	EC0
Default	0	0	0	0	0	0	0	0

Bits 0 to 7/Error Counter Bits 0 to 7 (EC0 to EC7). EC0 is the LSB of the 24-bit counter.

Register Name: **BEC2**
Register Description: **BERT Error-Count Register 2**
Register Address: **E8h**

Bit #	7	6	5	4	3	2	1	0
Name	EC15	EC14	EC13	EC12	EC11	EC10	EC9	EC8
Default	0	0	0	0	0	0	0	0

Bits 0 to 7/Error Counter Bits 8 to 15 (EC8 to EC15)

Register Name: **BEC3**
Register Description: **BERT Error-Count Register 3**
Register Address: **E9h**

Bit #	7	6	5	4	3	2	1	0
Name	EC23	EC22	EC21	EC20	EC19	EC18	EC17	EC16
Default	0	0	0	0	0	0	0	0

Bits 0 to 7/Error Counter Bits 16 to 23 (EC16 to EC23). EC0 is the MSB of the 24-bit counter.

Register Name: **BIC**
Register Description: **BERT Interface Control Register**
Register Address: **EAh**

Bit #	7	6	5	4	3	2	1	0
Name	—	RFUS	—	TBAT	TFUS	—	BERTDIR	BERTEN
Default	0	0	0	0	0	0	0	0

Bit 0/BERT Enable (BERTEN)

0 = BERT disabled
1 = BERT enabled

Bit 1/BERT Direction (BERTDIR)

0 = network
BERT transmits toward the network (TTIP and TRING) and receives from the network (RTIP and RRING). The BERT pattern can be looped back to the receiver internally by using the framer loopback function.
1 = system
BERT transmits toward the system backplane (RSER) and receives from the system backplane (TSER).

Bits 2, 5, 7/Unused, must be set to 0 for proper operation

Bit 3/Transmit Framed/Unframed Select (TFUS)

0 = BERT does not source data into the F-bit position (framed)
1 = BERT does source data into the F-bit position (unframed)

Bit 4/Transmit Byte-Align Toggle (TBAT). A 0-to-1 transition forces the BERT to byte align its pattern with the transmit formatter. This bit must be transitioned in order to byte align the Daly pattern.

Bit 6/Receive Framed/Unframed Select (RFUS)

0 = BERT is not sent data from the F-bit position (framed)
1 = BERT is sent data from the F-bit position (unframed)

27. PAYLOAD ERROR-INSERTION FUNCTION (T1 MODE ONLY)

An error-insertion function is available in the DS2155 and is used to create errors in the payload portion of the T1 frame in the transmit path. This function is only available in T1 mode. Errors can be inserted over the entire frame or the user can select which channels are to be corrupted. Errors are created by inverting the last bit in the count sequence. For example, if the error rate 1 in 16 is selected, the 16th bit is inverted. F-bits are excluded from the count and are never corrupted. Error rate changes occur on frame boundaries. Error-insertion options include continuous and absolute number with both options supporting selectable insertion rates.

Table 27-A. Transmit Error-Insertion Setup Sequence

STEP	ACTION
1	Enter desired error rate in the ERC register. Note: If ER3 through ER0 = 0, no errors are generated even if the constant error-insertion feature is enabled.
2A or 2B	For constant error insertion, set CE = 1 (ERC.4). For a defined number of errors: – Set CE = 0 (ERC.4) – Load NOE1 and NOE2 with the number of errors to be inserted – Toggle WNOE (ERC.7) from 0 to 1 to begin error insertion

Register Name: **ERC**
Register Description: **Error-Rate Control Register**
Register Address: **EBh**

Bit #	7	6	5	4	3	2	1	0
Name	WNOE	—	—	CE	ER3	ER2	ER1	ER0
Default	0	0	0	0	0	0	0	0

Bits 0 to 3/Error-Insertion Rate Select Bits (ER0 to ER3)

ER3	ER2	ER1	ER0	Error Rate
0	0	0	0	No errors inserted
0	0	0	1	1 in 16
0	0	1	0	1 in 32
0	0	1	1	1 in 64
0	1	0	0	1 in 128
0	1	0	1	1 in 256
0	1	1	0	1 in 512
0	1	1	1	1 in 1024
1	0	0	0	1 in 2048
1	0	0	1	1 in 4096
1	0	1	0	1 in 8192
1	0	1	1	1 in 16,384
1	1	0	0	1 in 32,768
1	1	0	1	1 in 65,536
1	1	1	0	1 in 131,072
1	1	1	1	1 in 262,144

Bit 4/Constant Errors (CE). When this bit is set high (and the ER0 to ER3 bits are not set to 0000), the error-insertion logic ignores the number-of-error registers (NOE1, NOE2) and generates errors constantly at the selected insertion rate. When CE is set to 0, the NOEx registers determine how many errors are to be inserted.

Bits 5, 6/Unused, must be set to 0 for proper operation

Bit 7/Write NOE Registers (WNOE). If the host wishes to update to the NOEx registers, this bit must be toggled from a 0 to a 1 after the host has already loaded the prescribed error count into the NOEx registers. The toggling of this bit causes the error count loaded into the NOEx registers to be loaded into the error-insertion circuitry on the next clock cycle. Subsequent updates require that the WNOE bit be set to 0 and then 1 once again.

27.1 Number-of-Errors Registers

The number-of-error registers determine how many errors are generated. Up to 1023 errors can be generated. The host loads the number of errors to be generated into the NOE1 and NOE2 registers. The host can also update the number of errors to be created by first loading the prescribed value into the NOE registers and then toggling the WNOE bit in the error-rate control registers.

Table 27-B. Error Insertion Examples

VALUE	WRITE	READ
000h	Do not create any errors	No errors left to be inserted
001h	Create a single error	One error left to be inserted
002h	Create two errors	Two errors left to be inserted
3FFh	Create 1023 errors	1023 errors left to be inserted

Register Name: **NOE1**
Register Description: **Number-of-Errors 1**
Register Address: **ECh**

Bit #	7	6	5	4	3	2	1	0
Name	C7	C6	C5	C4	C3	C2	C1	C0
Default	0	0	0	0	0	0	0	0

Bits 0 to 7/Number-of-Errors Counter Bits 0 to 7 (C0 to C7). Bit C0 is the LSB of the 10-bit counter.

Register Name: **NOE2**
Register Description: **Number-of-Errors 2**
Register Address: **EDh**

Bit #	7	6	5	4	3	2	1	0
Name	—	—	—	—	—	—	C9	C8
Default	0	0	0	0	0	0	0	0

Bits 0, 1/Number-of-Errors Counter Bits 8 to 9 (C8 to C9). Bit C9 is the MSB of the 10-bit counter.

27.1.1 Number-of-Errors Left Register

The host can read the NOELx registers at any time to determine how many errors are left to be inserted.

Register Name: **NOEL1**
Register Description: **Number-of-Errors Left 1**
Register Address: **EEh**

Bit #	7	6	5	4	3	2	1	0
Name	C7	C6	C5	C4	C3	C2	C1	C0
Default	0	0	0	0	0	0	0	0

Bits 0 to 7/Number-of-Errors Left Counter Bits 0 to 7 (C0 to C7). Bit C0 is the LSB of the 10-bit counter.

Register Name: **NOEL2**
Register Description: **Number-of-Errors Left 2**
Register Address: **EFh**

Bit #	7	6	5	4	3	2	1	0
Name	—	—	—	—	—	—	C9	C8
Default	0	0	0	0	0	0	0	0

Bits 0, 1/Number-of-Errors Left Counter Bits 8 to 9 (C8 to C9). Bit C9 is the MSB of the 10-bit counter.

28. INTERLEAVED PCM BUS OPERATION (IBO)

In many architectures, the PCM outputs of individual framers are combined into higher speed PCM buses to simplify transport across the system backplane. The DS2155 can be configured to allow PCM data to be multiplexed into higher speed buses eliminating external hardware, saving board space and cost. The DS2155 can be configured for channel or frame interleave.

The interleaved PCM bus operation (IBO) supports three bus speeds. The 4.096MHz bus speed allows two PCM data streams to share a common bus. The 8.192MHz bus speed allows four PCM data streams to share a common bus. The 16.384MHz bus speed allows eight PCM data streams to share a common bus. See Figure 28-1 for an example of four transceivers sharing a common 8.192MHz PCM bus. The receive elastic stores of each transceiver must be enabled. Through the IBO register, the user can configure each transceiver for a specific bus position. For all IBO bus configurations, each transceiver is assigned an exclusive position in the high-speed PCM bus. The 8kHz frame sync can be generated from the system backplane or from the first device on the bus. All other devices on the bus must have their frame syncs configured as inputs. Relative to this common frame sync, the devices await their turn to drive or sample the bus according to the settings of the DA0, DA1, and DA2 bits of the IBOC register.

28.1 Channel Interleave

In channel interleave mode, data is output to the PCM data-out bus one channel at a time from each of the connected DS2155s until all channels of frame *n* from each DS2155 have been placed on the bus. This mode can be used even when the DS2155s are operating asynchronous to each other. The elastic stores manage slip conditions (Figure 35-22).

28.2 Frame Interleave

In frame interleave mode, data is output to the PCM data-out bus one frame at a time from each of the DS2155s. This mode is used only when all connected DS2155s are operating in a synchronous fashion (all inbound T1 or E1 lines are synchronous) and are synchronous with the system clock (system clock derived from T1 or E1 line). Slip conditions are not allowed in this mode (Figure 35-23).

Register Name: **IBOC**
Register Description: **Interleave Bus Operation Control Register**
Register Address: **C5h**

Bit #	7	6	5	4	3	2	1	0
Name	—	IBS1	IBS0	IBOSEL	IBOEN	DA2	DA1	DA0
Default	0	0	0	0	0	0	0	0

Bits 0 to 2/Device Assignment Bits (DA0 to DA2)

DA2	DA1	DA0	Device Position on Bus
0	0	0	1st
0	0	1	2nd
0	1	0	3rd
0	1	1	4th
1	0	0	5th
1	0	1	6th
1	1	0	7th
1	1	1	8th

Bit 3/Interleave Bus Operation Enable (IBOEN)
0 = IBO disabled
1 = IBO enabled

Bit 4/Interleave Bus Operation Select (IBOSEL). This bit selects channel or frame interleave mode.
0 = channel interleave
1 = frame interleave

Bits 5, 6/IBO Bus Size Bit 1 (IBS0 to IBS1). Indicates how many devices are on the bus.

IBS1	IBS0	Bus Size
0	0	Two devices on bus
0	1	Four devices on bus
1	0	Eight devices on bus
1	1	Reserved for future use

Bit 7/Unused, must be set to 0 for proper operation

Figure 28-1. IBO Example

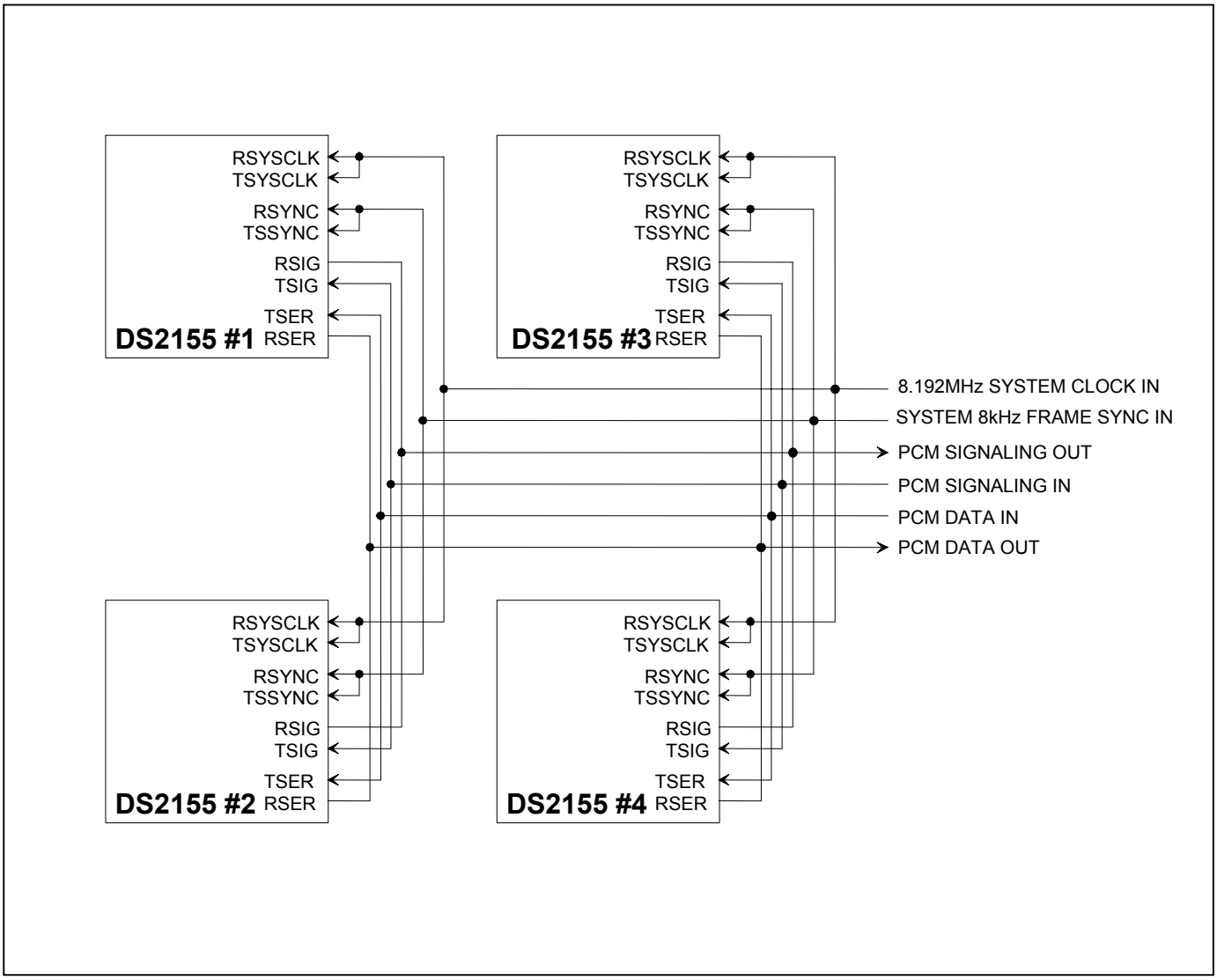

29. EXTENDED SYSTEM INFORMATION BUS (ESIB)

The extended system information bus (ESIB) allows up to eight DS2155s to share an 8-bit CPU bus for reporting alarms and interrupt status as a group. With a single bus read, the host can be updated with alarm or interrupt status from all members of the group. There are two control registers (ESIBCR1 and ESIBCR2) and four information registers (ESIB1, ESIB2, ESIB3, and ESIB4). For example, eight DS2155s can be grouped into an ESIB group. A single read of the ESIB1 register of any member of the group yields the interrupt status of all eight DS2155s. Therefore, the host can determine which device or devices are causing an interrupt without polling all eight devices. Through ESIB2, the host can gather synchronization status on all members of the group. ESIB3 and ESIB4 can be programmed to report various alarms on a device-by-device basis.

There are three device pins involved in forming an ESIB group: ESIBS0, ESIBS1, and ESIBRD. A 10kΩ pullup resistor must be provided on ESIBS0, ESIBS1, and ESIBRD.

Figure 29-1. ESIB Group of Four DS2155s

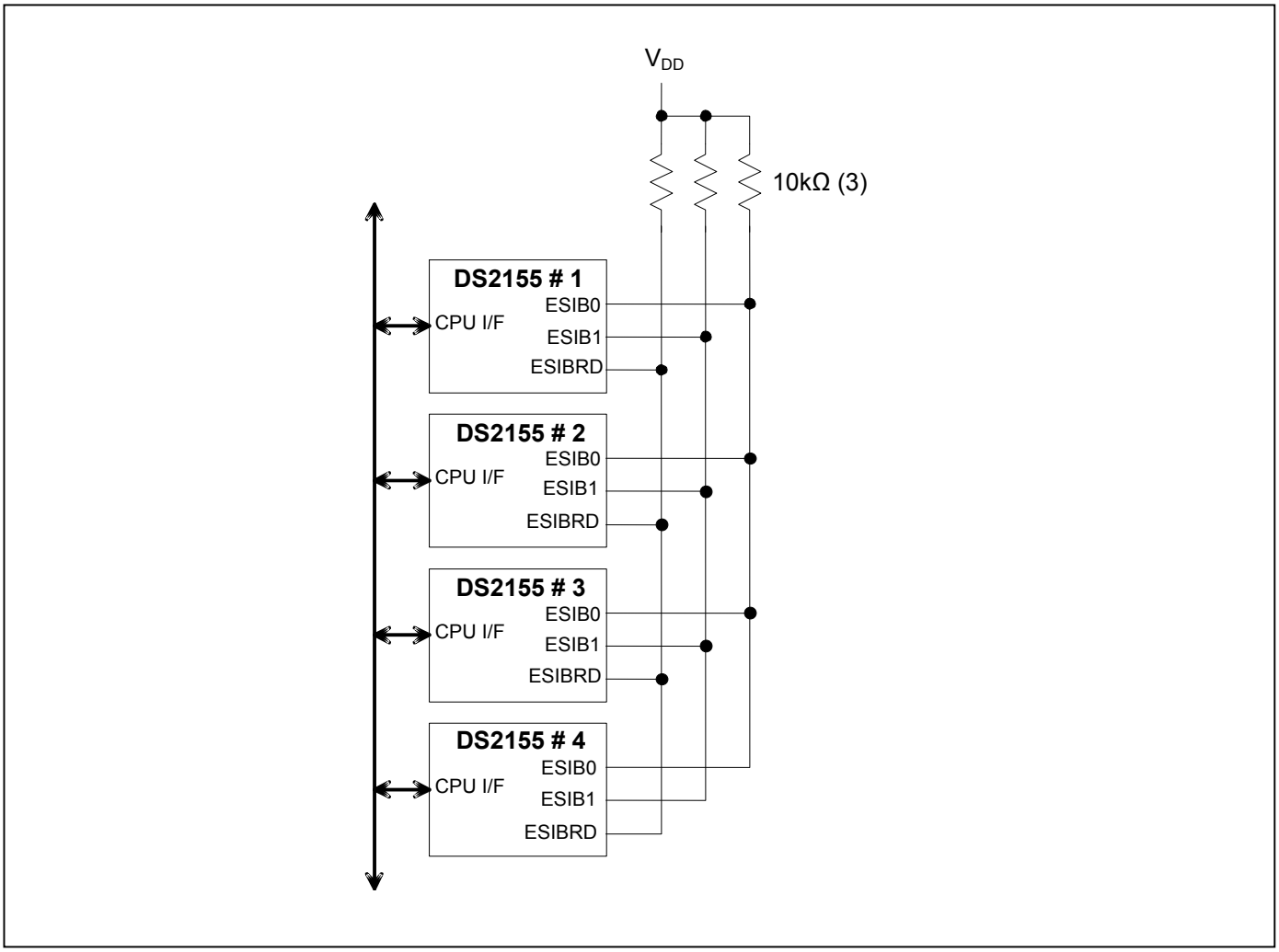

Register Name: **ESIBCR1**
Register Description: **Extended System Information Bus Control Register 1**
Register Address: **B0h**

Bit #	7	6	5	4	3	2	1	0
Name	—	—	—	—	ESIBSEL2	ESIBSEL1	ESIBSEL0	ESIEN
Default	0	0	0	0	0	0	0	0

Bit 0/Extended System Information Bus Enable (ESIEN)
0 = disabled
1 = enabled

Bits 1 to 3/Output Data Bus Line Select (ESIBSEL0 to ESIBSEL2). These bits tell the DS2155 what data bus bit to output the ESIB data on when one of the ESIB information registers is accessed. Each member of the ESIB group must have a unique bit selected.

ESIBSEL2	ESIBSEL1	ESIBSEL0	Bus Bit Driven
0	0	0	AD0
0	0	1	AD1
0	1	0	AD2
0	1	1	AD3
1	0	0	AD4
1	0	1	AD5
1	1	0	AD6
1	1	1	AD7

Bits 4 to 7/Unused, must be set to 0 for proper operation

Register Name: **ESIBCR2**
Register Description: **Extended System Information Bus Control Register 2**
Register Address: **B1h**

Bit #	7	6	5	4	3	2	1	0
Name	—	ESI4SEL2	ESI4SEL1	ESI4SEL0	—	ESI3SEL2	ESI3SEL1	ESI3SEL0
Default	0	0	0	0	0	0	0	0

Bits 0 to 2/Address ESI3 Data Output Select (ESI3SEL0 to ESI3SEL2). These bits select what status is to be output when the DS2155 decodes an ESI3 address during a bus read operation.

ESI3SEL2	ESI3SEL1	ESI3SEL0	Status Output (T1 Mode)	Status Output (E1 Mode)
0	0	0	RBL	RUA1
0	0	1	RYEL	RRA
0	1	0	LUP	RDMA
0	1	1	LDN	V52LNK
1	0	0	SIGCHG	SIGCHG
1	0	1	ESSLIP	ESSLIP
1	1	0	—	—
1	1	1	—	—

Bit 3/Unused, must be set to 0 for proper operation

Bits 4 to 6/Address ESI4 Data-Output Select (ESI4SEL0 to ESI4SEL2). These bits select what status is to be output when the DS2155 decodes an ESI4 address during a bus read operation.

ESI4SEL2	ESI4SEL1	ESI4SEL0	Status Output (T1 Mode)	Status Output (E1 Mode)
0	0	0	RBL	RUA1
0	0	1	RYEL	RRA
0	1	0	LUP	RDMA
0	1	1	LDN	V52LNK
1	0	0	SIGCHG	SIGCHG
1	0	1	ESSLIP	ESSLIP
1	1	0	—	—
1	1	1	—	—

Bit 7/Unused, must be set to 0 for proper operation

Register Name: **ESIB1**
Register Description: **Extended System Information Bus Register 1**
Register Address: **B2h**

Bit #	7	6	5	4	3	2	1	0
Name	DISn	DISn	DISn	DISn	DISn	DISn	DISn	DISn
Default	0	0	0	0	0	0	0	0

Bits 0 to 7/Device Interrupt Status (DISn). Causes all devices participating in the ESIB group to output their interrupt status on the appropriate data bus line selected by the ESIBSEL0 to ESIBSEL2 bits of the ESIBCR1 register.

Register Name: **ESIB2**
Register Description: **Extended System Information Bus Register 2**
Register Address: **B3h**

Bit #	7	6	5	4	3	2	1	0
Name	DRLOSn	DRLOSn	DRLOSn	DRLOSn	DRLOSn	DRLOSn	DRLOSn	DRLOSn
Default	0	0	0	0	0	0	0	0

Bits 0 to 7/Device Receive Loss-of-Sync (DRLOSn). Causes all devices participating in the ESIB group to output their frame synchronization status on the appropriate data bus line selected by the ESIBSEL0 to ESIBSEL2 bits of the ESIBCR1 register.

Register Name: **ESIB3**
Register Description: **Extended System Information Bus Register 3**
Register Address: **B4h**

Bit #	7	6	5	4	3	2	1	0
Name	UST1n	UST1n	UST1n	UST1n	UST1n	UST1n	UST1n	UST1n
Default	0	0	0	0	0	0	0	0

Bits 0 to 7/User-Selected Status 1 (UST1n). Causes all devices participating in the ESIB group to output status or alarms as selected by the ESI3SEL0 to ESI3SEL2 bits in the ESIBCR2 configuration register on the appropriate data bus line selected by the ESIBSEL0 to ESIBSEL2 bits of the ESIBCR2 register

Register Name: **ESIB4**
Register Description: **Extended System Information Bus Register 4**
Register Address: **B5h**

Bit #	7	6	5	4	3	2	1	0
Name	UST2n	UST2n	UST2n	UST2n	UST2n	UST2n	UST2n	UST2n
Default	0	0	0	0	0	0	0	0

Bits 0 to 7/User-Selected Status 2 (UST2n). Causes all devices participating in the ESIB group to output status or alarms as selected by the ESI4SEL0 to ESI4SEL2 bits in the ESIBCR2 configuration register on the appropriate data bus line selected by the ESIBSEL0 to ESIBSEL2 bits of the ESIBCR2 register

30. PROGRAMMABLE BACKPLANE CLOCK SYNTHESIZER

The DS2155 contains an on-chip clock synthesizer that generates a user-selectable clock output on the BPCLK pin, referenced to the recovered receive clock (RCLK). The synthesizer uses a phase-locked loop to generate low-jitter clocks. Common applications include generation of port and backplane system clocks. The CCR2 register is used to enable (CCR2.0) and select (CCR2.1 and CCR2.2) the clock frequency of the BPCLK pin.

Register Name: **CCR2**
Register Description: **Common Control Register 2**
Register Address: **71h**

Bit #	7	6	5	4	3	2	1	0
Name						BPCS1	BPCS0	BPEN
Default	0	0	0	0	0	0	0	0

Bit 0/Backplane Clock Enable (BPEN)

0 = disable BPCLK pin (pin held at logic 0)
1 = enable BPCLK pin

Bits 1, 2/Backplane Clock Selects (BPCS0, BPCS1)

BPCS1	BPCS0	BPCLK Frequency (MHz)
0	0	16.384
0	1	8.192
1	0	4.096
1	1	2.048

Bits 3 to 7/ Unused, must be set to 0 for proper operation

31. FRACTIONAL T1/E1 SUPPORT

The DS2155 can be programmed to output gapped clocks for selected channels in the receive and transmit paths to simplify connections into a USART or LAPD controller in fractional T1/E1 or ISDN-PRI applications. The receive and transmit paths have independent enables. Channel formats supported include 56kbps and 64kbps. This is accomplished by assigning an alternate function to the RCHCLK and TCHCLK pins. Setting CCR3.0 = 1 causes the RCHCLK pin to output a gapped clock as defined by the receive fractional T1/E1 function of the PCPR register. Setting CCR3.2 = 1 causes the TCHCLK pin to output a gapped clock as defined by the transmit fractional T1/E1 function of the PCPR register. CCR3.1 and CCR3.3 can be used to select between 64kbps and 56kbps operation. See Section 7 for details about programming the per-channel function. In T1 mode no clock is generated at the F-bit position.

When 56kbps mode is selected, the LSB clock in the channel is omitted. Only the seven most significant bits of the channel have clocks.

Register Name: **CCR3**
Register Description: **Common Control Register 3**
Register Address: **72h**

Bit #	7	6	5	4	3	2	1	0
Name	TMSS	INTDIS	-	-	TDATFMT	TGPCKEN	RDATFMT	RGPCKEN
Default	0	0	0	0	0	0	0	0

Bit 0/Receive Gapped-Clock Enable (RGPCKEN)
0 = RCHCLK functions normally
1 = enable gapped bit-clock output on RCHCLK

Bit 1/Receive Channel-Data Format (RDATFMT)
0 = 64kbps (data contained in all 8 bits)
1 = 56kbps (data contained in seven out of the 8 bits)

Bit 2/Transmit Gapped-Clock Enable (TGPCKEN)
0 = TCHCLK functions normally
1 = enable gapped bit-clock output on TCHCLK

Bit 3/Transmit Channel-Data Format (TDATFMT)
0 = 64kbps (data contained in all 8 bits)
1 = 56kbps (data contained in seven out of the 8 bits)

Bit 4/ Unused, must be set to 0 for proper operation

Bit 5/ Unused, must be set to 0 for proper operation

Bit 6/Interrupt Disable (INTDIS). This bit is convenient for disabling interrupts without altering the various interrupt mask register settings.
0 = interrupts are enabled according to the various mask register settings
1 = interrupts are disabled regardless of the mask register settings

Bit 7/Transmit Multiframe Sync Source (TMSS). Should be set = 0 only when transmit hardware signaling is enabled.
0 = elastic store is source of multiframe sync
1 = framer or TSYNC pin is source of multiframe sync

32. USER-PROGRAMMABLE OUTPUT PINS

The DS2155 provides four user-programmable output pins. The pins are automatically cleared to 0 at power-up or as a result of a hardware- or software-issued reset.

Register Name: **CCR4**
Register Description: **Common Control Register 4**
Register Address: **73h**

Bit #	7	6	5	4	3	2	1	0
Name	RLT3	RLT2	RLT1	RLT0	UOP3	UOP2	UOP1	UOP0
Default	0	0	0	0	0	0	0	0

Bit 0/User-Defined Output 0 (UOP0)
0 = logic 0 level at pin
1 = logic 1 level at pin

Bit 1/User-Defined Output 1 (UOP1)
0 = logic 0 level at pin
1 = logic 1 level at pin

Bit 2/User-Defined Output 2 (UOP2)
0 = logic 0 level at pin
1 = logic 1 level at pin

Bit 3/User-Defined Output 3 (UOP3)
0 = logic 0 level at pin
1 = logic 1 level at pin

Bits 4 to 7/Receive Level Threshold Bits (RLT0 to RLT3)

RLT3	RLT2	RLT1	RLT0	Receive Level (dB)
0	0	0	0	Greater than -2.5
0	0	0	1	-2.5
0	0	1	0	-5.0
0	0	1	1	-7.5
0	1	0	0	-10.0
0	1	0	1	-12.5
0	1	1	0	-15.0
0	1	1	1	-17.5
1	0	0	0	-20.0
1	0	0	1	-22.5
1	0	1	0	-25.0
1	0	1	1	-27.5
1	1	0	0	-30.0
1	1	0	1	-32.5
1	1	1	0	-35.0
1	1	1	1	Less than -37.5

33. TRANSMIT FLOW DIAGRAMS

Figure 33-1. T1 Transmit Flow Diagram

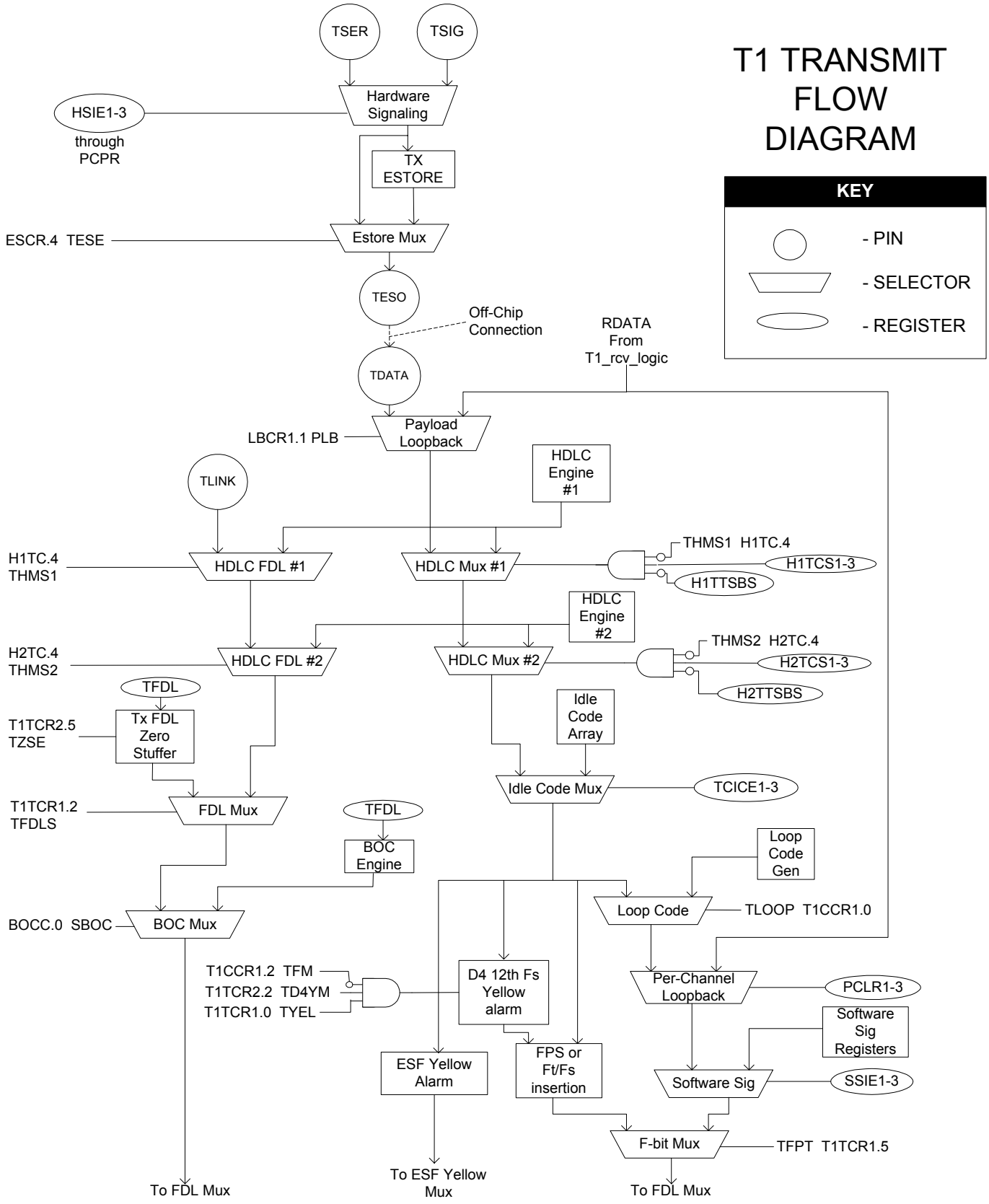

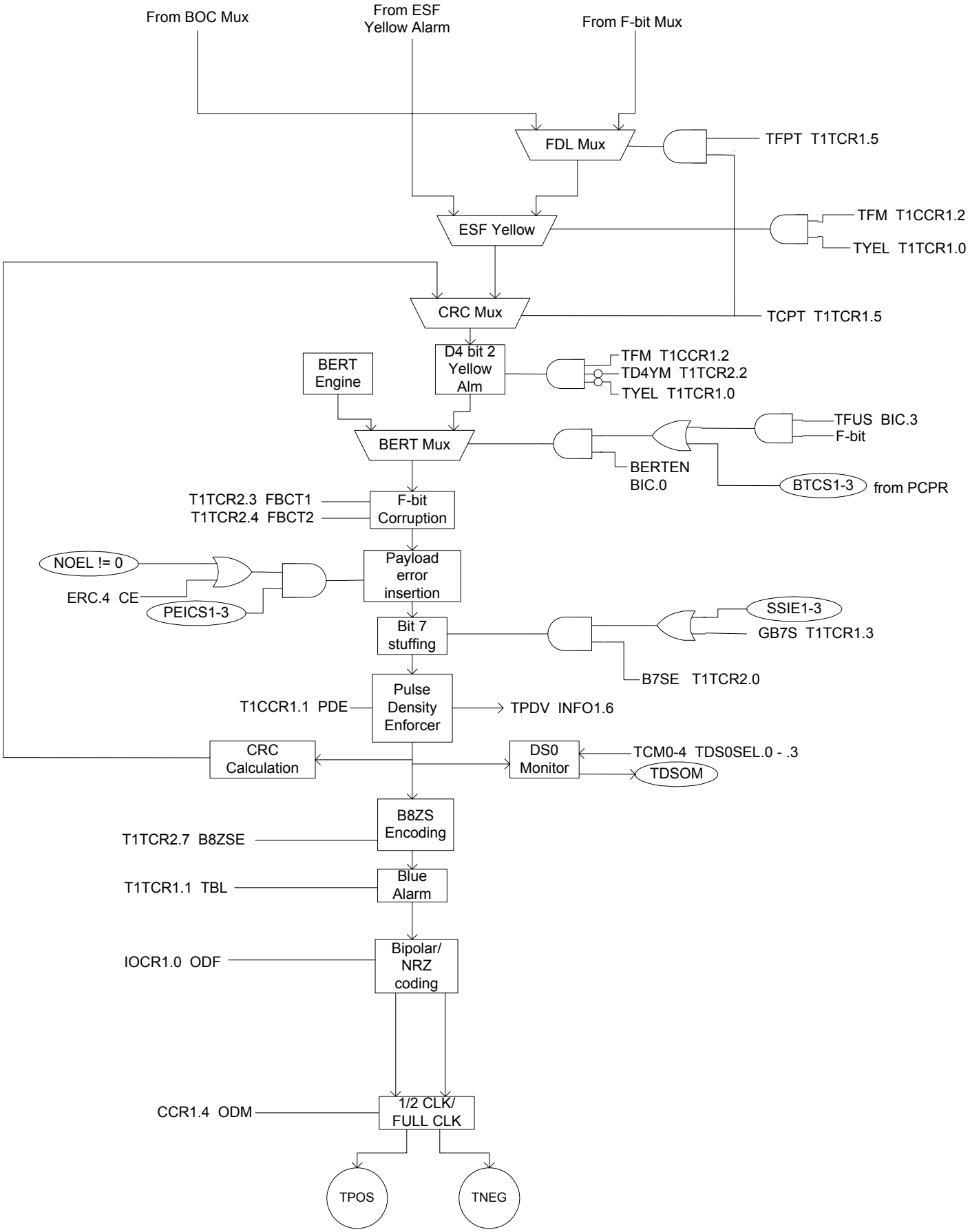
From BOC Mux
From ESF Yellow Alarm
From F-bit Mux
FDL Mux
TFPT T1TCR1.5
ESF Yellow
TFM T1CCR1.2
TYEL T1TCR1.0
CRC Mux
TCPT T1TCR1.5
BERT Engine
D4 bit 2 Yellow Alm
TFM T1CCR1.2
TD4YM T1TCR2.2
TYEL T1TCR1.0
BERT Mux
TFUS BIC.3
F-bit
BERTEN BIC.0
BTCS1-3
from PCPR
T1TCR2.3 FBCT1
T1TCR2.4 FBCT2
F-bit Corruption
NOEL != 0
ERC.4 CE
PEICS1-3
Payload error insertion
SSIE1-3
GB7S T1TCR1.3
Bit 7 stuffing
B7SE T1TCR2.0
T1CCR1.1 PDE
Pulse Density Enforcer
TPDV INFO1.6
CRC Calculation
DS0 Monitor
TCM0-4 TDS0SEL.0 - .3
TDSOM
B8ZS Encoding
T1TCR2.7 B8ZSE
Blue Alarm
T1TCR1.1 TBL
Bipolar/ NRZ coding
IOCR1.0 ODF
1/2 CLK/ FULL CLK
CCR1.4 ODM
TPOS
TNEG

Figure 33-2. E1 Transmit Flow Diagram

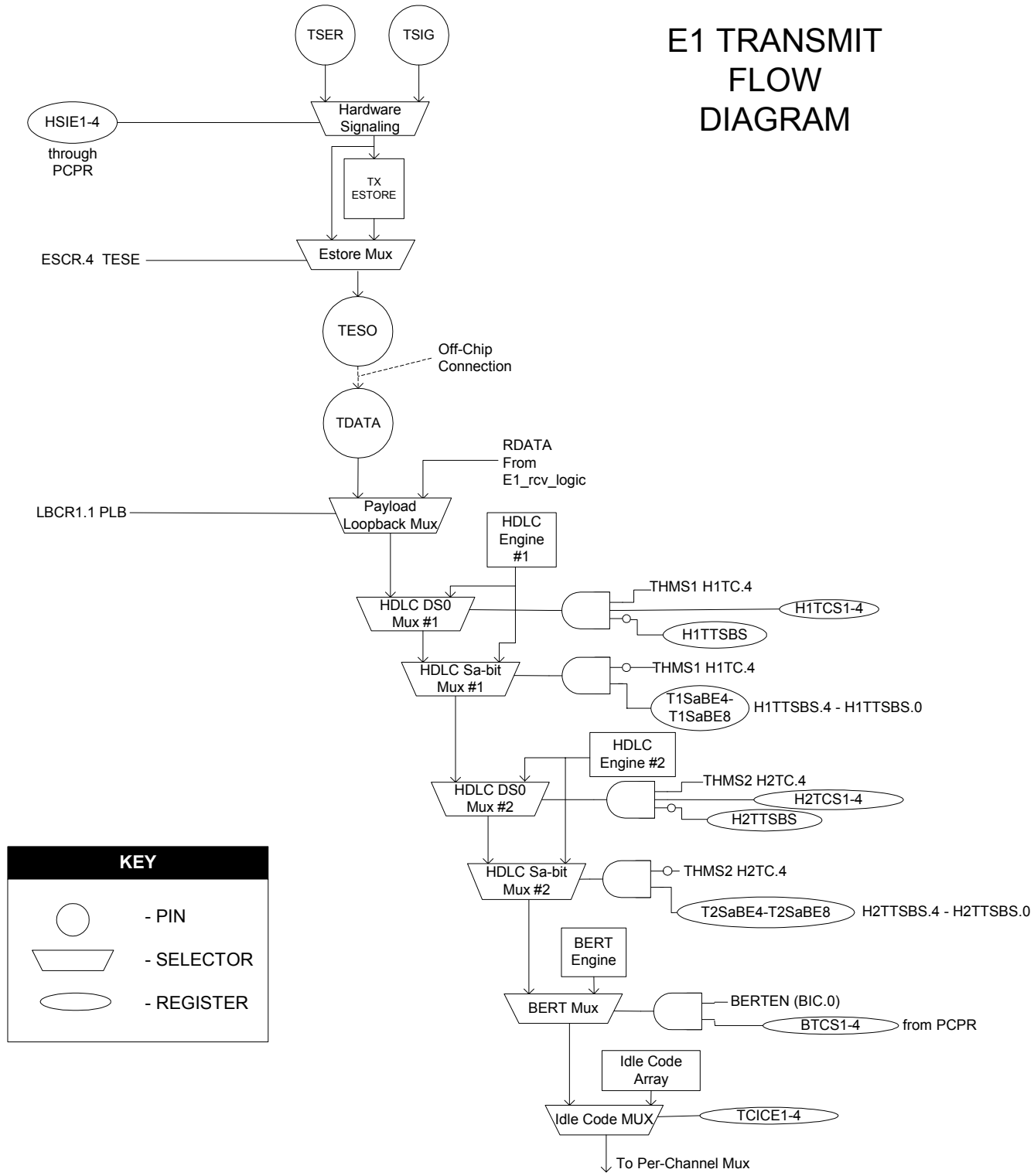

E1 TRANSMIT FLOW DIAGRAM

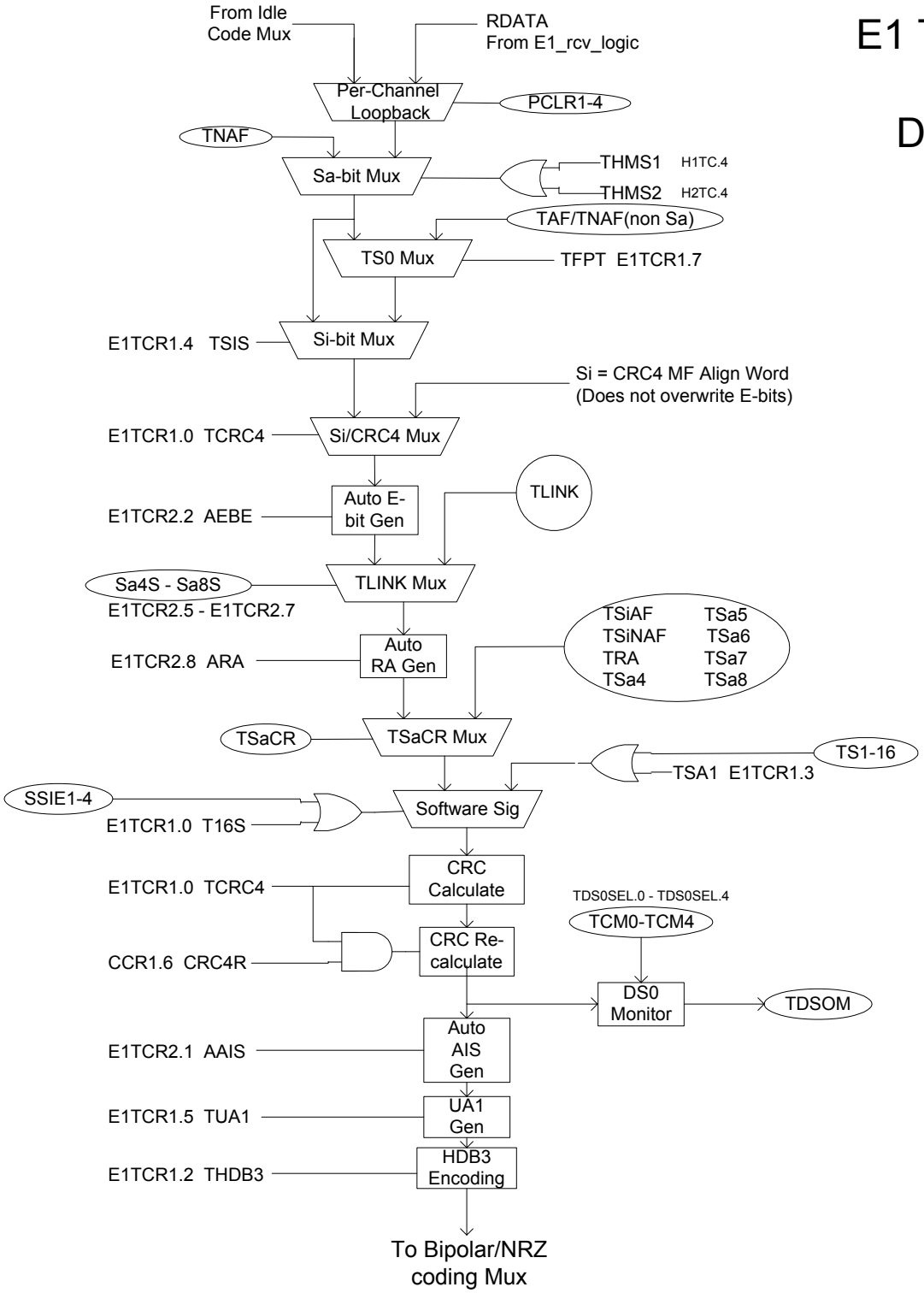

E1 TRANSMIT FLOW DIAGRAM

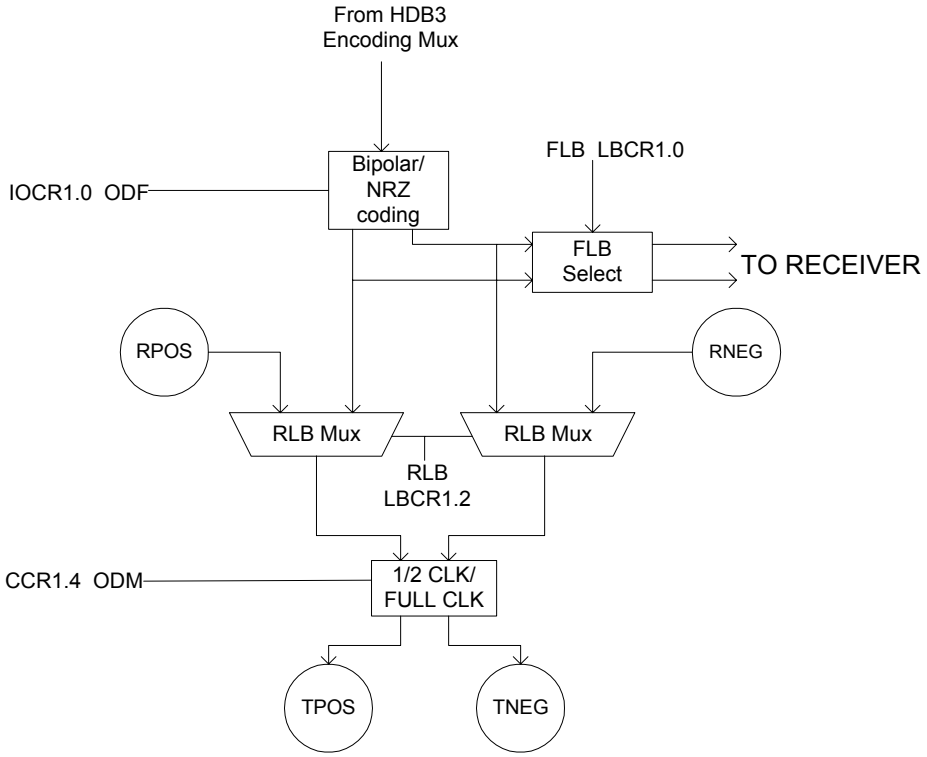

34. JTAG BOUNDARY SCAN ARCHITECTURE AND TEST ACCESS PORT

34.1 Description

The DS2155 IEEE 1149.1 design supports the standard instruction codes SAMPLE/PRELOAD, BYPASS, and EXTEST. Optional public instructions included are HIGH-Z, CLAMP, and IDCODE (Figure 34-1.). The DS2155 contains the following features as required by IEEE 1149.1 standard test access port (TAP) and boundary scan architecture.

- Test Access Port
- TAP Controller
- Instruction Register
- Bypass Register
- Boundary Scan Register
- Device Identification Register

The DS2155 is pin-compatible with the DS2152, DS21x52 (T1) and DS2154, DS21x54 (E1) SCT families. The JTAG feature uses pins that had no function in the DS2152 and DS2154. Details about boundary scan architecture and the TAP are in IEEE 1149.1-1990, IEEE 1149.1a-1993, and IEEE 1149.1b-1994. **NOTE:** JTAG functionality is production tested at 25C only.

The TAP contains the necessary interface pins JTRST, JTCLK, JTMS, JTDI, and JTDO. See the pin descriptions in Section 4 for details.

Figure 34-1. JTAG Functional Block Diagram

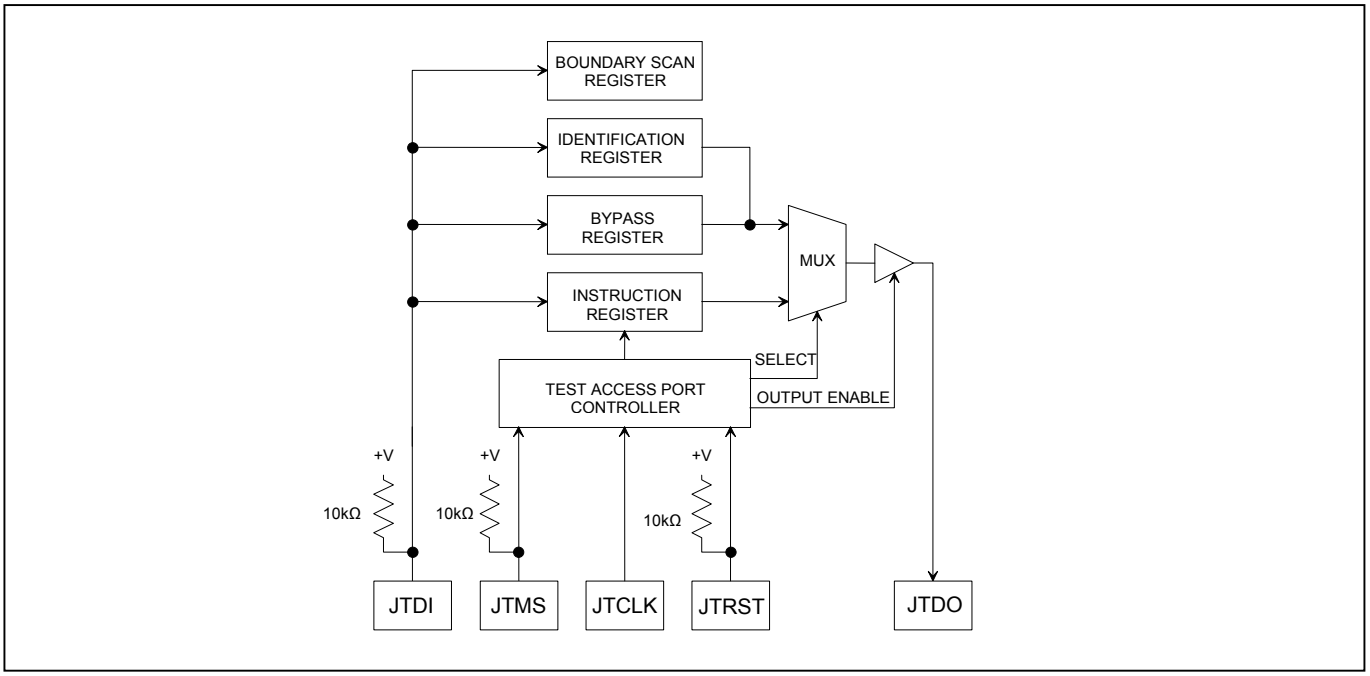

TAP Controller State Machine

The TAP controller is a finite state machine that responds to the logic level at JTMS on the rising edge of JTCLK (Figure 34-2).

Test-Logic-Reset

Upon power-up, the TAP controller is in the Test-Logic-Reset state. The instruction register contains the IDCODE instruction. All system logic of the device operates normally.

Run-Test-Idle

The Run-Test-Idle is used between scan operations or during specific tests. The instruction register and test registers remain idle.

Select-DR-Scan

All test registers retain their previous state. With JTMS LOW, a rising edge of JTCLK moves the controller into the Capture-DR state and initiates a scan sequence. JTMS HIGH during a rising edge on JTCLK moves the controller to the Select-IR-Scan state.

Capture-DR

Data can be parallel-loaded into the test data registers selected by the current instruction. If the instruction does not call for a parallel load or the selected register does not allow parallel loads, the test register remains at its current value. On the rising edge of JTCLK, the controller goes to the Shift-DR state if JTMS is LOW or it goes to the Exit1-DR state if JTMS is HIGH.

Shift-DR

The test data register selected by the current instruction is connected between JTDI and JTDO and shifts data one stage toward its serial output on each rising edge of JTCLK. If a test register selected by the current instruction is not placed in the serial path, it maintains its previous state.

Exit1-DR

While in this state, a rising edge on JTCLK puts the controller in the Update-DR state, which terminates the scanning process, if JTMS is HIGH. A rising edge on JTCLK with JTMS LOW puts the controller in the Pause-DR state.

Pause-DR

Shifting of the test registers is halted while in this state. All test registers selected by the current instruction retain their previous state. The controller remains in this state while JTMS is LOW. A rising edge on JTCLK with JTMS HIGH puts the controller in the Exit2-DR state.

Exit2-DR

A rising edge on JTCLK with JTMS HIGH while in this state puts the controller in the Update-DR state and terminates the scanning process. A rising edge on JTCLK with JTMS LOW enters the Shift-DR state.

Update-DR

A falling edge on JTCLK while in the Update-DR state latches the data from the shift register path of the test registers into the data output latches. This prevents changes at the parallel output because of changes in the shift register.

Select-IR-Scan

All test registers retain their previous state. The instruction register remains unchanged during this state. With JTMS LOW, a rising edge on JTCLK moves the controller into the Capture-IR state and initiates a scan sequence for the instruction register. JTMS HIGH during a rising edge on JTCLK puts the controller back into the Test-Logic-Reset state.

Capture-IR

The Capture-IR state is used to load the shift register in the instruction register with a fixed value. This value is loaded on the rising edge of JTCLK. If JTMS is HIGH on the rising edge of JTCLK, the controller enters the Exit1-IR state. If JTMS is LOW on the rising edge of JTCLK, the controller enters the Shift-IR state.

Shift-IR

In this state, the shift register in the instruction register is connected between JTDI and JTDO and shifts data one stage for every rising edge of JTCLK toward the serial output. The parallel register and all test registers remain at their previous states. A rising edge on JTCLK with JTMS HIGH moves the controller to the Exit1-IR state. A rising edge on JTCLK with JTMS LOW keeps the controller in the Shift-IR state while moving data one stage through the instruction shift register.

Exit1-IR

A rising edge on JTCLK with JTMS LOW puts the controller in the Pause-IR state. If JTMS is HIGH on the rising edge of JTCLK, the controller enters the Update-IR state and terminates the scanning process.

Pause-IR

Shifting of the instruction shift register is halted temporarily. With JTMS HIGH, a rising edge on JTCLK puts the controller in the Exit2-IR state. The controller remains in the Pause-IR state if JTMS is LOW during a rising edge on JTCLK.

Exit2-IR

A rising edge on JTCLK with JTMS LOW puts the controller in the Update-IR state. The controller loops back to Shift-IR if JTMS is HIGH during a rising edge of JTCLK in this state.

Update-IR

The instruction code shifted into the instruction shift register is latched into the parallel output on the falling edge of JTCLK as the controller enters this state. Once latched, this instruction becomes the current instruction. A rising edge on JTCLK with JTMS LOW puts the controller in the Run-Test-Idle state. With JTMS HIGH, the controller enters the Select-DR-Scan state.

Figure 34-2. TAP Controller State Diagram

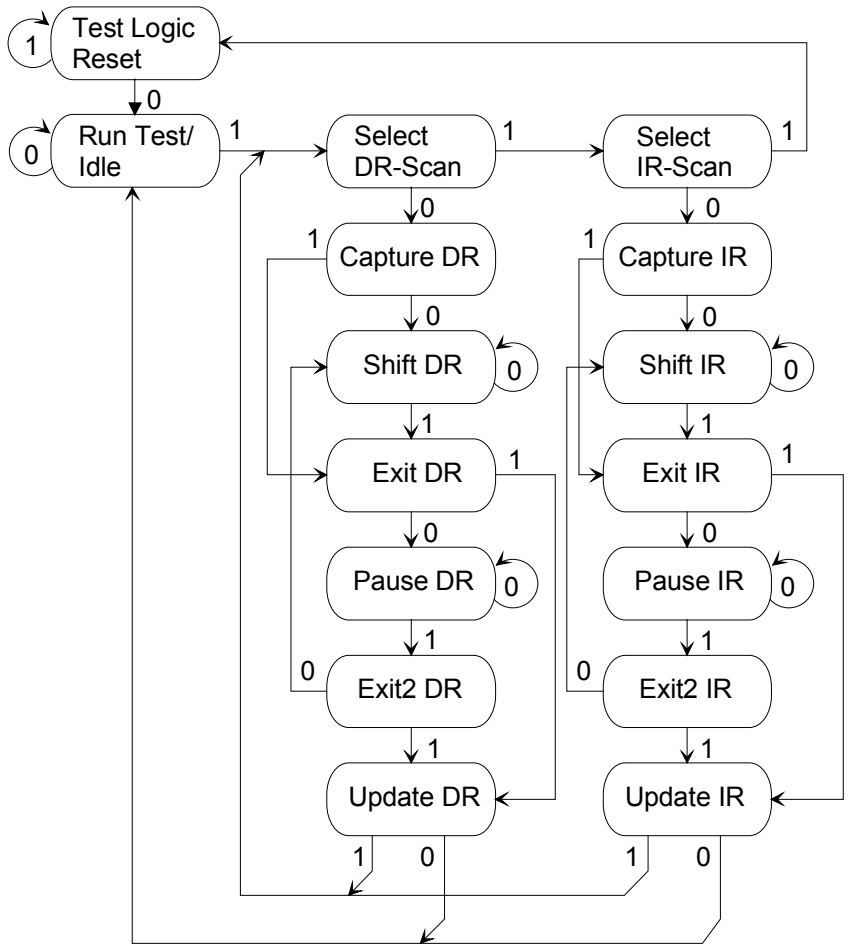

34.2 Instruction Register

The instruction register contains a shift register as well as a latched parallel output and is 3 bits in length. When the TAP controller enters the Shift-IR state, the instruction shift register is connected between JTDI and JTDO. While in the Shift-IR state, a rising edge on JTCLK with JTMS LOW shifts the data one stage toward the serial output at JTDO. A rising edge on JTCLK in the Exit1-IR state or the Exit2-IR state with JTMS HIGH moves the controller to the Update-IR state. The falling edge of that same JTCLK latches the data in the instruction shift register to the instruction parallel output. Instructions supported by the DS2155 and its respective operational binary codes are shown in Table 17-A.

Table 34-A. Instruction Codes for IEEE 1149.1 Architecture

INSTRUCTION	SELECTED REGISTER	INSTRUCTION CODES
SAMPLE/PRELOAD	Boundary Scan	010
BYPASS	Bypass	111
EXTEST	Boundary Scan	000
CLAMP	Bypass	011
HIGHZ	Bypass	100
IDCODE	Device Identification	001

SAMPLE/PRELOAD

This is a mandatory instruction for the IEEE 1149.1 specification that supports two functions. The digital I/Os of the device can be sampled at the boundary scan register without interfering with the normal operation of the device by using the Capture-DR state. SAMPLE/PRELOAD also allows the device to shift data into the boundary scan register through JTDI using the Shift-DR state.

BYPASS

When the BYPASS instruction is latched into the parallel instruction register, JTDI connects to JTDO through the 1-bit bypass test register. This allows data to pass from JTDI to JTDO without affecting the device's normal operation.

EXTEST

This allows testing of all interconnections to the device. When the EXTEST instruction is latched in the instruction register, the following actions occur: Once enabled through the Update-IR state, the parallel outputs of all digital output pins are driven. The boundary scan register is connected between JTDI and JTDO. The Capture-DR samples all digital inputs into the boundary scan register.

CLAMP

All digital outputs of the device output data from the boundary scan parallel output while connecting the bypass register between JTDI and JTDO. The outputs do not change during the CLAMP instruction.

HIGHZ

All digital outputs of the device are placed in a high-impedance state. The BYPASS register is connected between JTDI and JTDO.

IDCODE

When the IDCODE instruction is latched into the parallel instruction register, the identification test register is selected. The device identification code is loaded into the identification register on the rising edge of JTCLK following entry into the Capture-DR state. Shift-DR can be used to shift the identification code out serially through JTDO. During Test-Logic-Reset, the identification code is forced into the instruction register's parallel output. The ID code always has a 1 in the LSB position. The next 11 bits identify the manufacturer's JEDEC number and number of continuation bytes followed by 16 bits for the device and 4 bits for the version (Table 34-B). Table 34-C lists the device ID codes for the SCT devices.

Table 34-B. ID Code Structure

MSB			LSB
Version Contact Factory	Device ID	JEDEC	1
4 bits	16 bits	00010100001	1

Table 34-C. Device ID Codes

PART	16-BIT ID
DS2155	0010h
DS2156	0019h
DS21354	0005h
DS21554	0003h
DS21352	0004h
DS21552	0002h

34.3 Test Registers

IEEE 1149.1 requires a minimum of two test registers, the boundary scan register and the bypass register. An optional test register, the identification register, has been included with the DS2155 design. It is used with the IDCODE instruction and the Test-Logic-Reset state of the TAP controller.

34.4 Boundary Scan Register

This register contains both a shift register path and a latched parallel output for all control cells and digital I/O cells. It is *n* bits in length. See Table 34-D for cell bit locations and definitions.

34.5 Bypass Register

This is a single one-bit shift register used with the BYPASS, CLAMP, and HIGH-Z instructions that provides a short path between JTDI and JTDO.

34.6 Identification Register

The identification register contains a 32-bit shift register and a 32-bit latched parallel output. This register is selected during the IDCODE instruction and when the TAP controller is in the Test-Logic-Reset state. See Table 34-B and Table 34-C for more information on bit usage.

Table 34-D. Boundary Scan Control Bits

BIT	PIN	NAME	TYPE	CONTROL BIT FUNCTION
3	1	RCHBLK	O	—
—	2	JTMS	I	—
2	—	BPCLK.cntl	—	0 = BPCLK is an input 1 = BPCLK is an output
1	3	BPCLK	I/O	—
—	4	JTCLK	I	—
—	5	JTRST	I	—
0	6	RCL	O	—
—	7	JTDI	I	—
98	—	UOP0.cntl	—	0 = UOP0 is an input 1 = UOP0 is an output
97	8	UOP0	I/O	—
96	—	UOP1.cntl	—	0 = UOP1 is an input 1 = UOP1 is an output
95	9	UOP1	I/O	—
	10	JTDO	O	—
94	11	BTS	I	—
93	—	LIUC.cntl	—	0 = LIUC is an input 1 = LIUC is an output
92	12	LIUC	I/O	—
91	13	8XCLK	O	—
90	14	TSTRST	I	—
89	15	UOP2	O	—
—	16	RTIP	I	—
—	17	RRING	I	—
—	18	RVDD	—	—
—	19, 20, 24	RVSS	—	—
—	21	MCLK	I	—
—	22	XTALD	O	—
88	—	UOP3.cntl	—	0 = UOP3 is an input 1 = UOP3 is an output
87	23	UOP3	I/O	—
86	25	INT	O	—
85	26	TUSEL	I	—
—	27, 28	N.C.	—	—
—	29	TTIP	O	—
—	30	TVSS	—	—
—	31	TVDD	—	—
—	32	TRING	O	—
84	—	TCHBLK.cntl	—	0 = TCHBLK is an input 1 = TCHBLK is an output
83	33	TCHBLK	I/O	—
82	—	TLCLK.cntl	—	0 = TLCLK is an input 1 = TLCLK is an output
81	34	TLCLK	I/O	—
80	35	TLINK	I	—
79	—	ESIBS0.cntl	—	0 = ESIBS0 is an input 1 = ESIBS0 is an output
78	36	ESIBS0	I/O	—
77	—	TSYNC.cntl	—	0 = TSYNC is an input 1 = TSYNC is an output
76	37	TSYNC	I/O	—
75	38	TPOSI	I	—

BIT	PIN	NAME	TYPE	CONTROL BIT FUNCTION
74	39	TNEGI	I	—
73	40	TCLKI	I	—
72	—	TCLKO.cntl	—	0 = TCLKO is an input 1 = TCLKO is an output
71	41	TCLKO	I/O	
70	—	TNEGO.cntl	—	0 = TNEGO is an input 1 = TNEGO is an output
69	42	TNEGO	I/O	
68	—	TPOSO.cntl	—	0 = TPOSO is an input 1 = TPOSO is an output
67	43	TPOSO	I/O	—
—	44	DVDD	—	—
—	45	DVSS	—	—
66	46	TCLK	I	—
65	47	TSER	I	—
64	48	TSIG	I	—
63	49	TESO	O	—
62	50	TDATA	I	—
61	51	TSYSCLK	I	—
60	52	TSSYNC	I	—
59	—	TCHCLK.cntl	—	0 = TCHCLK is an input 1 = TCHCLK is an output
58	53	TCHCLK	I/O	—
57	—	ESIBS1.cntl	—	0 = ESIBS1 is an input 1 = ESIBS1 is an output
56	54	ESIBS1	I/O	—
55	55	MUX	I	—
54	—	BUS.cntl	—	0 = D0–D7/AD0–AD7 are inputs 1 = D0–D7/AD0–AD7 are inputs
53	56	D0/AD0	I/O	—
52	57	D1/AD1	I/O	—
51	58	D2/AD2	I/O	—
50	59	D3/AD3	I/O	—
—	60, 80, 84	DVSS	—	—
—	61, 81, 83	DVDD	—	—
49	62	D4/AD4	I/O	—
48	63	D5/AD5	I/O	—
47	64	D6/AD6	I/O	—
46	65	D7/AD7	I/O	—
45	66	A0	I	—
44	67	A1	I	—
43	68	A2	I	—
42	69	A3	I	—
41	70	A4	I	—
40	71	A5	I	—
39	72	A6	I	—
38	73	ALE(AS)/A7	I	—
37	74	$\overline{RD}$ ($\overline{DS}$)	I	—
36	75	$\overline{CS}$	I	—
35	—	ESIBRD.cntl	—	0 = ESIBRD is an input 1 = ESIBRD is an output
34	76	ESIBRD	I/O	—
33	77	$\overline{WR}$ (R/$\overline{W}$)	I	—
32	78	RLINK	O	—
31	79	RLCLK	O	—

BIT	PIN	NAME	TYPE	CONTROL BIT FUNCTION
30	82	RCLK	O	—
29	85	RDATA	O	—
28	—	RPOSI.cntl	—	0 = RPOSI is an input 1 = RPOSI is an output
27	86	RPOSI	I/O	—
26	—	RNEGI.cntl	—	0 = RNEGI is an input 1 = RNEGI is an output
25	87	RNEGI	I/O	—
24	—	RCLKI.cntl	—	0 = RCLKI is an input 1 = RCLKI is an output
23	88	RCLKI	I/O	—
22	89	RCLKO	O	—
21	90	RNEGO	O	—
20	91	RPOSO	O	—
19	—	RCHCLK.cntl	I/O	0 = RCHCLK is an input 1 = RCHCLK is an output
18	92	RCHCLK	I/O	—
17	—	RSIGF.cntl	—	0 = RSIGF is an input 1 = RSIGF is an output
16	93	RSIGF	I/O	—
15	—	RSIG.cntl	—	0 = RSIG is an input 1 = RSIG is an output
14	94	RSIG	I/O	—
13	95	RSER	O	—
12	—	RMSYNC.cntl	—	0 = RMSYNC is an input
11	96	RMSYNC	I/O	—
10	—	RFSYNC.cntl	—	0 = RFSYNC is an input 1 = RFSYNC is an output
9	97	RFSYNC	I/O	—
8	—	RSYNC.cntl	—	0 = RSYNC is an input 1 = RSYNC is an output
7	98	RSYNC	I/O	—
6	99	RLOS/LOTC	O	—
5	—	RSYSCLK.cntl	—	0 = RSYSCLK is an input 1 = RSYSCLK in an output
4	100	RSYSCLK	I/O	—

35. FUNCTIONAL TIMING DIAGRAMS

35.1 T1 Mode

Figure 35-1. Receive-Side D4 Timing

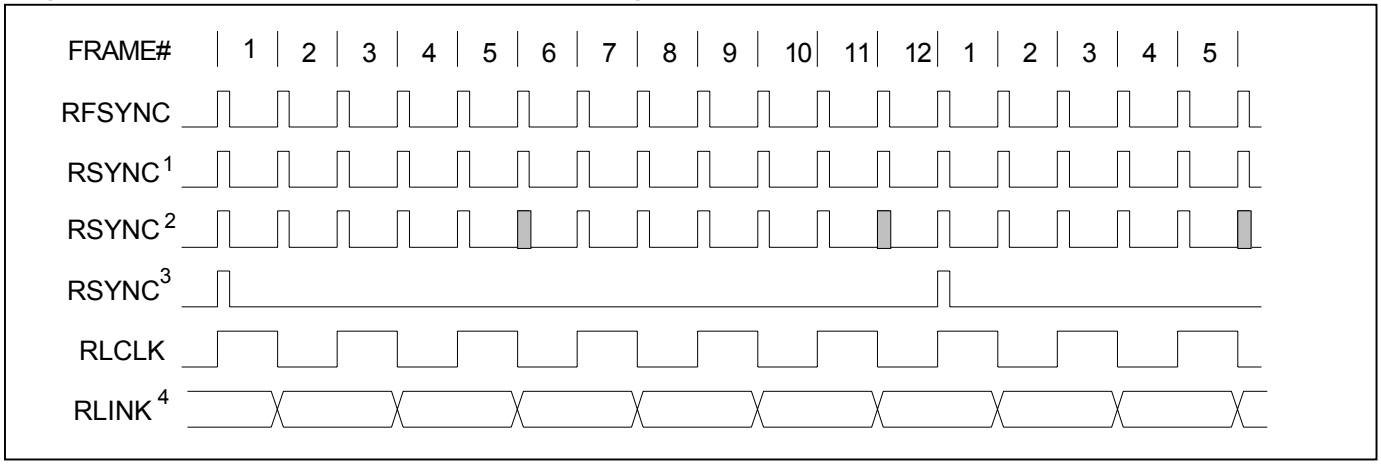

Note 1: RSYNC in the frame mode (IOCR1.5 = 0) and double-wide frame sync is not enabled (IOCR1.6 = 0).

Note 2: RSYNC in the frame mode (IOCR1.5 = 0) and double-wide frame sync is enabled (IOCR1.6 = 1).

Note 3: RSYNC in the multiframe mode (IOCR1.5 = 1).

Note 4: RLINK data (Fs bits) is updated one bit prior to even frames and held for two frames.

Figure 35-2. Receive-Side ESF Timing

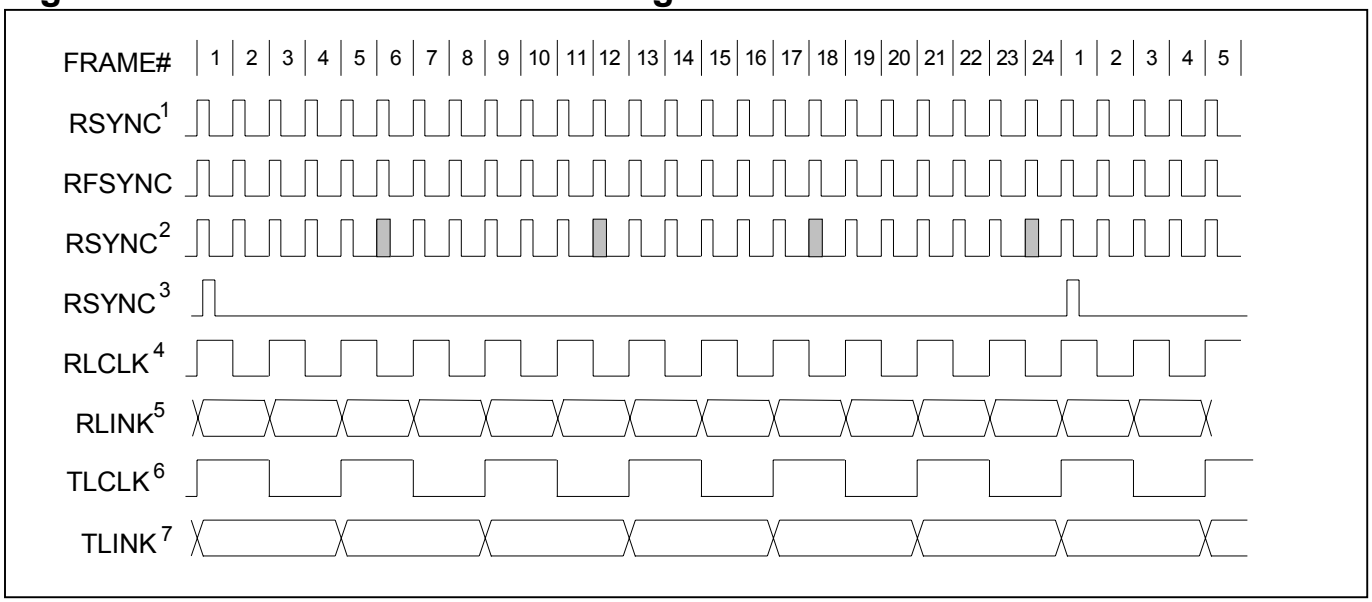

Note 1: RSYNC in frame mode (IOCR1.4 = 0) and double-wide frame sync is not enabled (IOCR1.6 = 0).

Note 2: RSYNC in frame mode (IOCR1.4 = 0) and double-wide frame sync is enabled (IOCR1.6 = 1).

Note 3: RSYNC in multiframe mode (IOCR1.4 = 1).

Note 4: ZBTSI mode disabled (T1RCR2.2 = 0).

Note 5: RLINK data (FDL bits) is updated one bit time before odd frames and held for two frames.

Note 6: ZBTSI mode is enabled (T1RCR2.2 = 1).

Note 7: RLINK data (Z bits) is updated one bit time before odd frames and held for four frames.

Figure 35-3. Receive-Side Boundary Timing (Elastic Store Disabled)

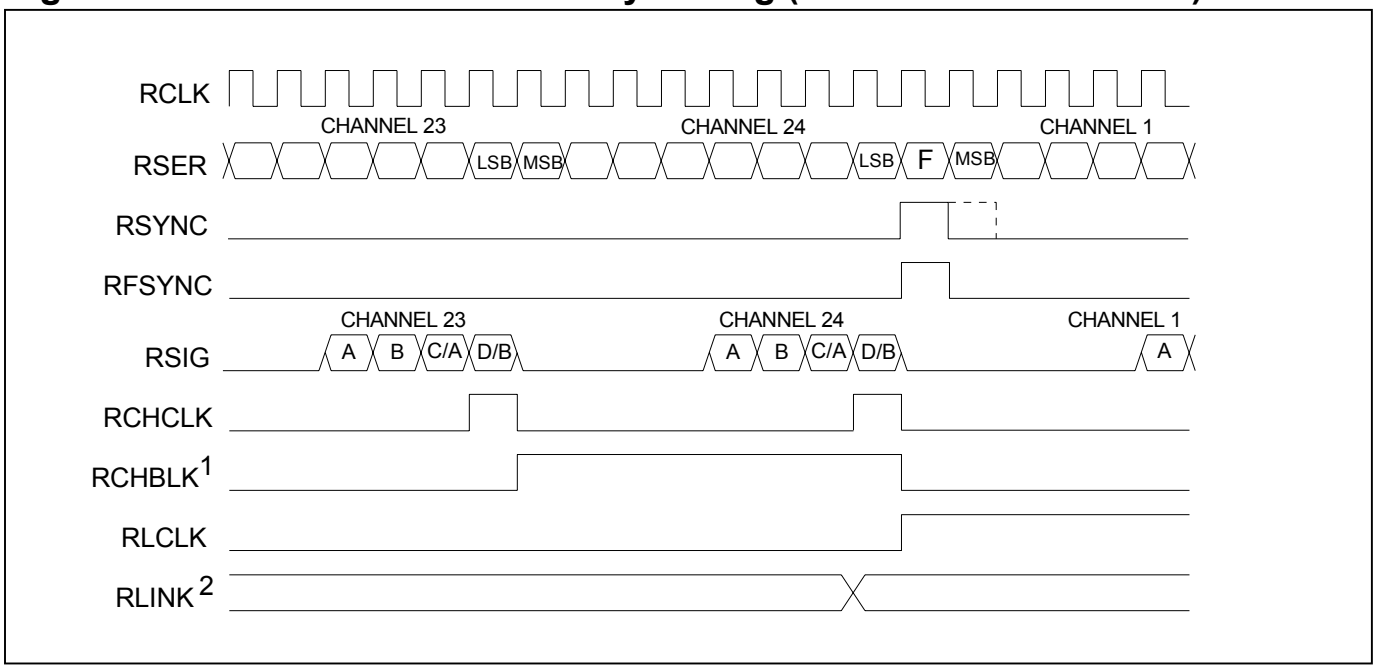

Note 1: RCHBLK is programmed to block channel 24.

Note 2: Shown is RLINK/RLCLK in the ESF framing mode.

Figure 35-4. Receive-Side 1.544MHz Boundary Timing (Elastic Store Enabled)

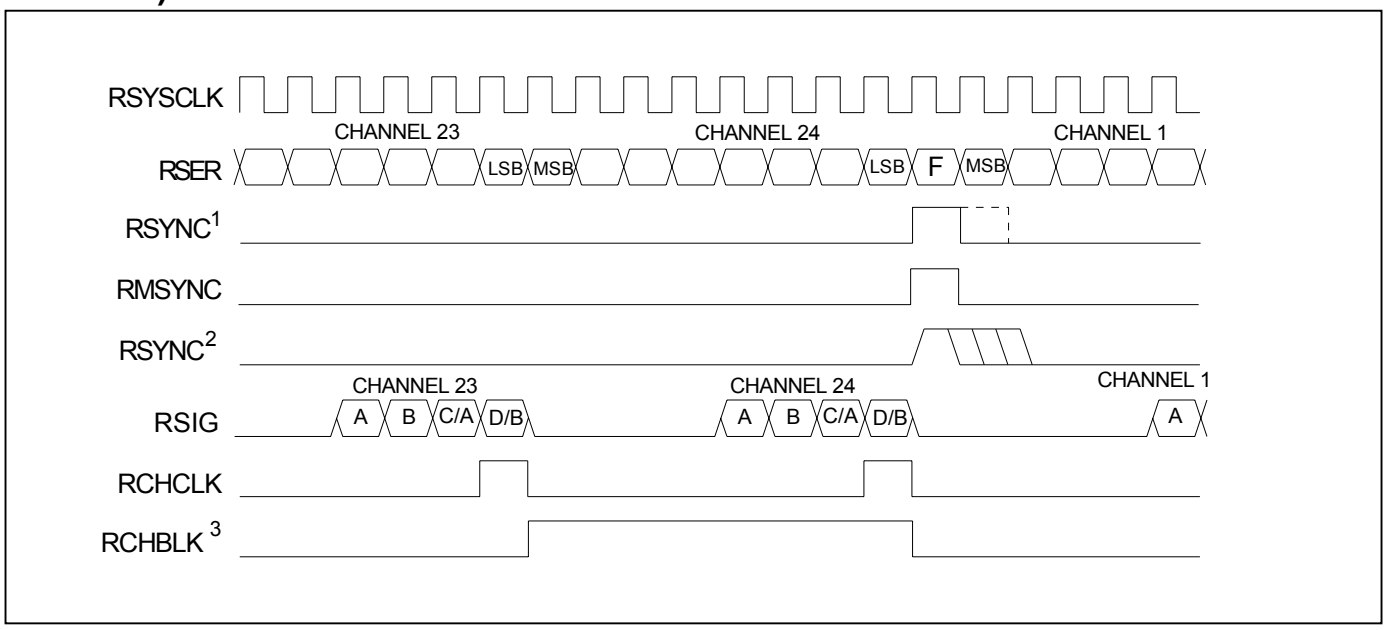

Note 1: RSYNC is in the output mode (IOCR1.4 = 0).

Note 2: RSYNC is in the input mode (IOCR1.4 = 1).

Note 3: RCHBLK is programmed to block channel 24.

Figure 35-5. Receive-Side 2.048MHz Boundary Timing (Elastic Store Enabled)

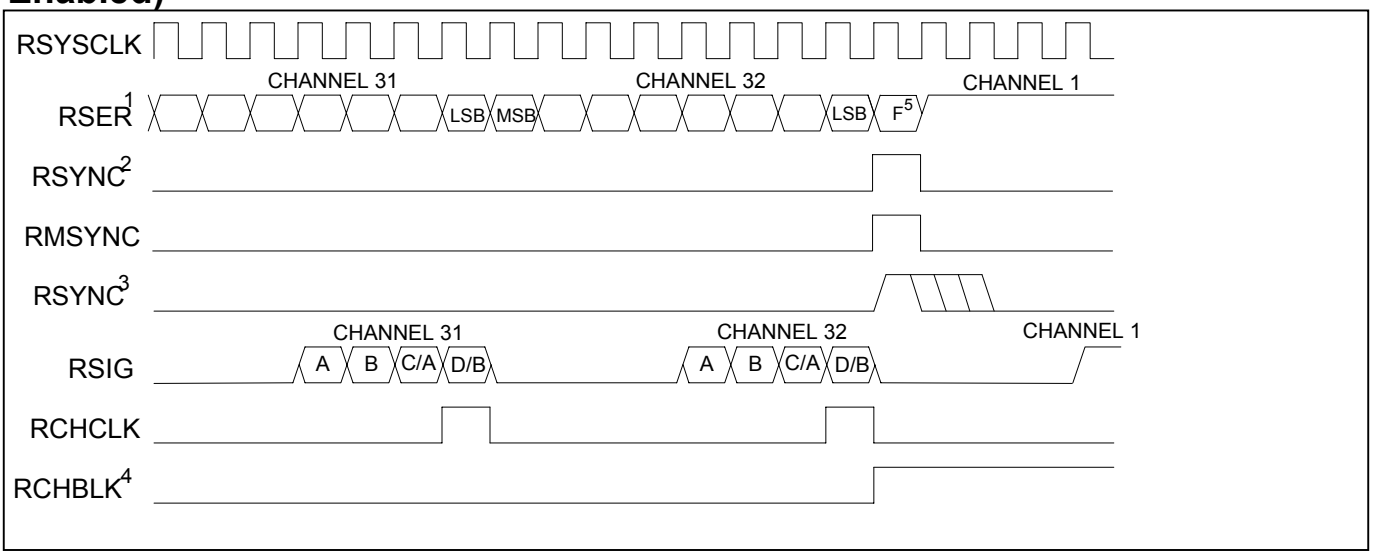

Note 1: RSER data in channels 1, 5, 9, 13, 17, 21, 25, and 29 are forced to 1.

Note 2: RSYNC is in the output mode (IOCR1.4 = 0).

Note 3: RSYNC is in the input mode (IOCR1.4 = 1).

Note 4: RCHBLK is forced to 1 in the same channels as RSER (see Note 1).

Note 5: The F-bit position is passed through the receive-side elastic store.

Figure 35-6. Transmit-Side D4 Timing

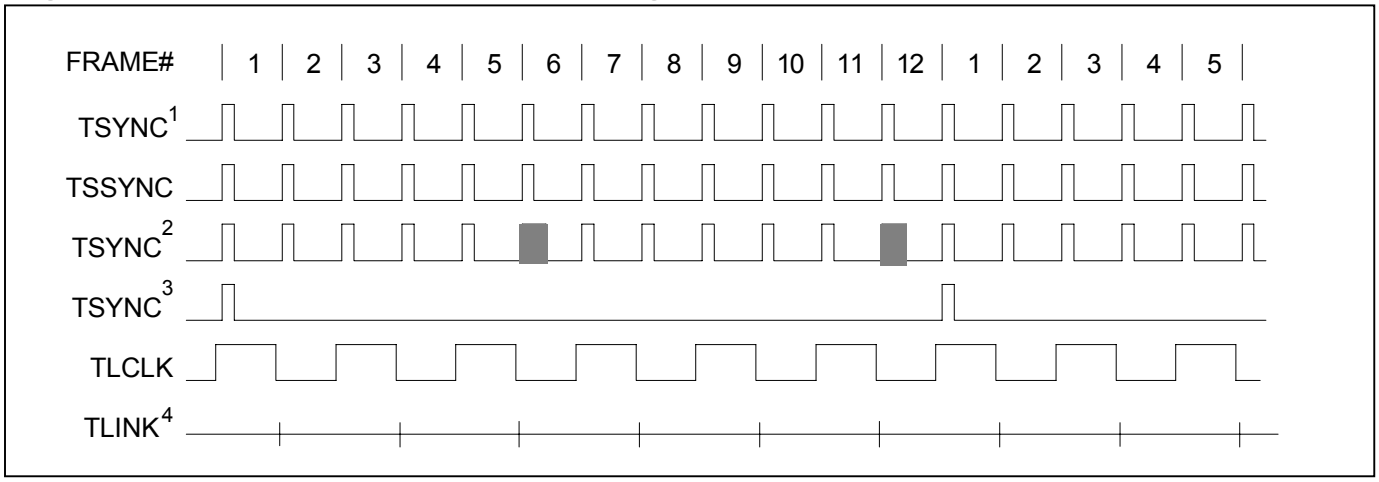

Note 1: TSYNC in the frame mode (IOCR1.2 = 0) and double-wide frame sync is not enabled (IOCR1.1 = 0).

Note 2: TSYNC in the frame mode (IOCR1.2 = 0) and double-wide frame sync is enabled (IOCR1.1 = 1).

Note 3: TSYNC in the multiframe mode (IOCR1.2 = 1).

Note 4: TLINK data (Fs bits) is sampled during the F-bit position of even frames for insertion into the outgoing T1 stream when enabled through T1TCR1.2.

Figure 35-7. Transmit-Side ESF Timing

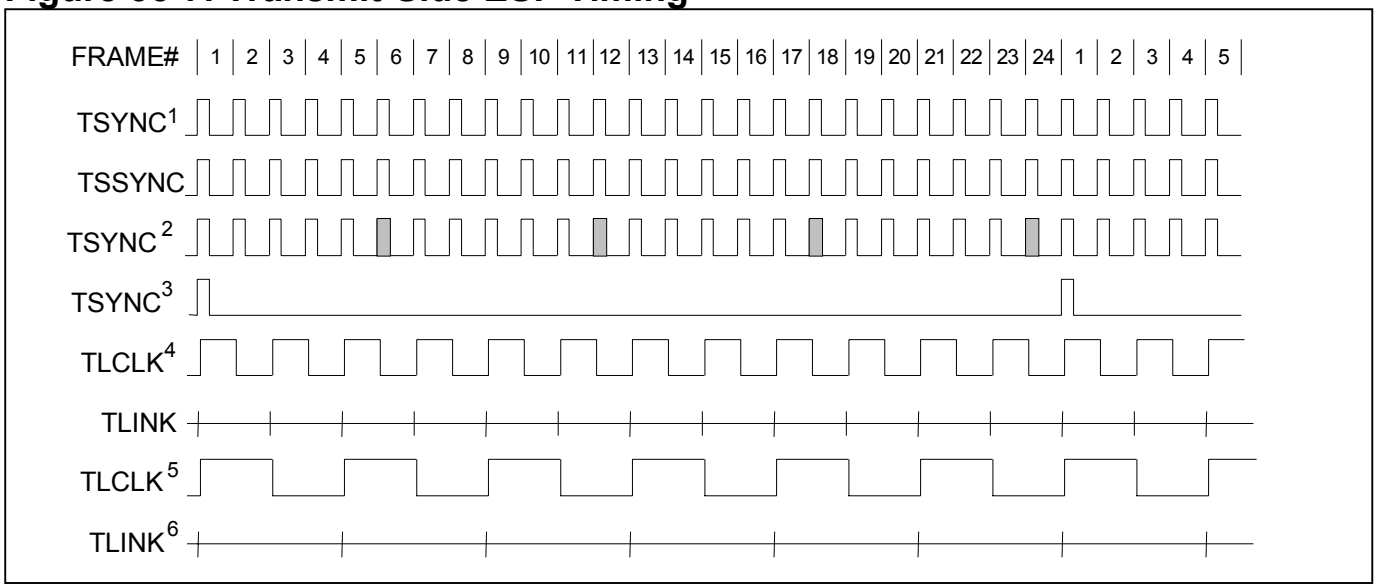

Note 1: TSYNC in frame mode (IOCR1.2 = 0) and double-wide frame sync is not enabled (IOCR1.3 = 0).

Note 2: TSYNC in frame mode (IOCR1.2 = 0) and double-wide frame sync is enabled (IOCR1.3 = 1).

Note 3: TSYNC in multiframe mode (IOCR1.2 = 1).

Note 4: TLINK data (FDL bits) sampled during the F-bit time of odd frame and inserted into the outgoing T1 stream if enabled through TCR1.2.

Note 5: ZBTSI mode is enabled (T1TCR2.1 = 1).

Note 6: TLINK data (Z bits) sampled during the F-bit time of frames 1, 5, 9, 13, 17, and 21 and inserted into the outgoing stream if enabled through T1TCR1.2.

Figure 35-8. Transmit-Side Boundary Timing (with Elastic Store Disabled)

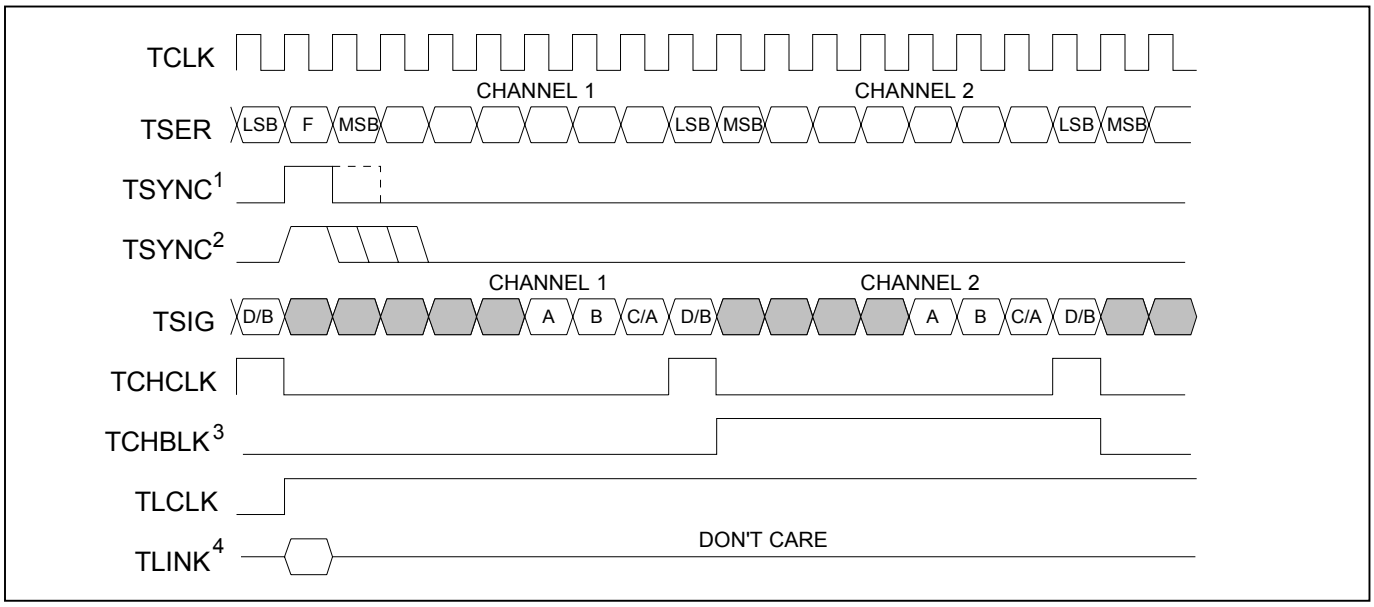

Note 1: TSYNC is in the output mode (IOCR1.1 = 1).

Note 2: TSYNC is in the input mode (IOCR1.1 = 0).

Note 3: TCHBLK is programmed to block channel 2.

Note 4: Shown is TLINK/TLCLK in the ESF framing mode.

Figure 35-9. Transmit-Side 1.544MHz Boundary Timing (Elastic Store Enabled)

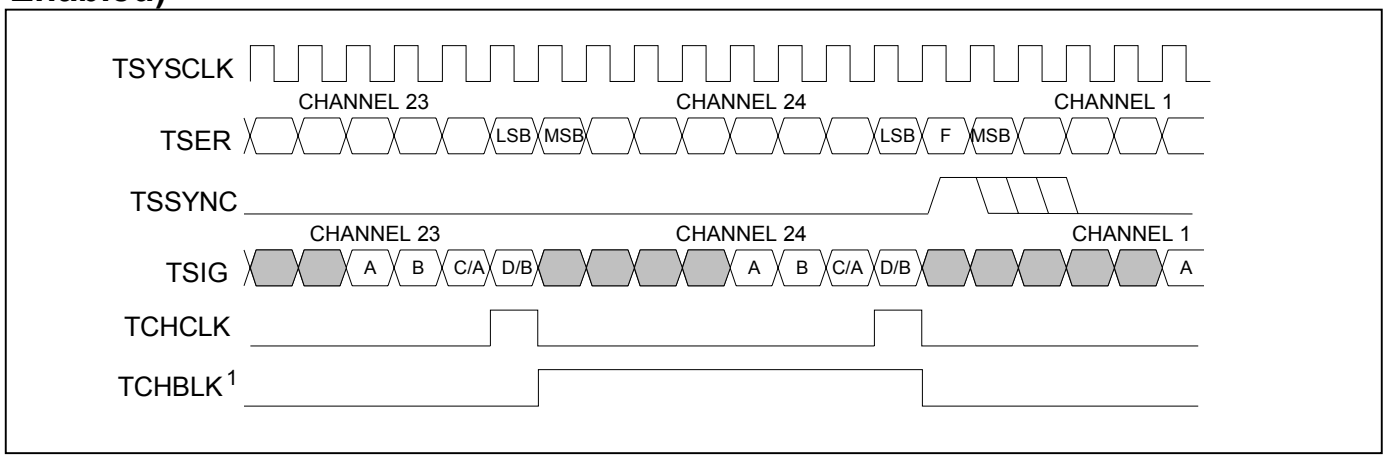

Note 1: TCHBLK is programmed to block channel 24 (if the TPCSI bit is set, then the signaling data at TSIG is ignored during channel 24).

Figure 35-10. Transmit-Side 2.048MHz Boundary Timing (Elastic Store Enabled)

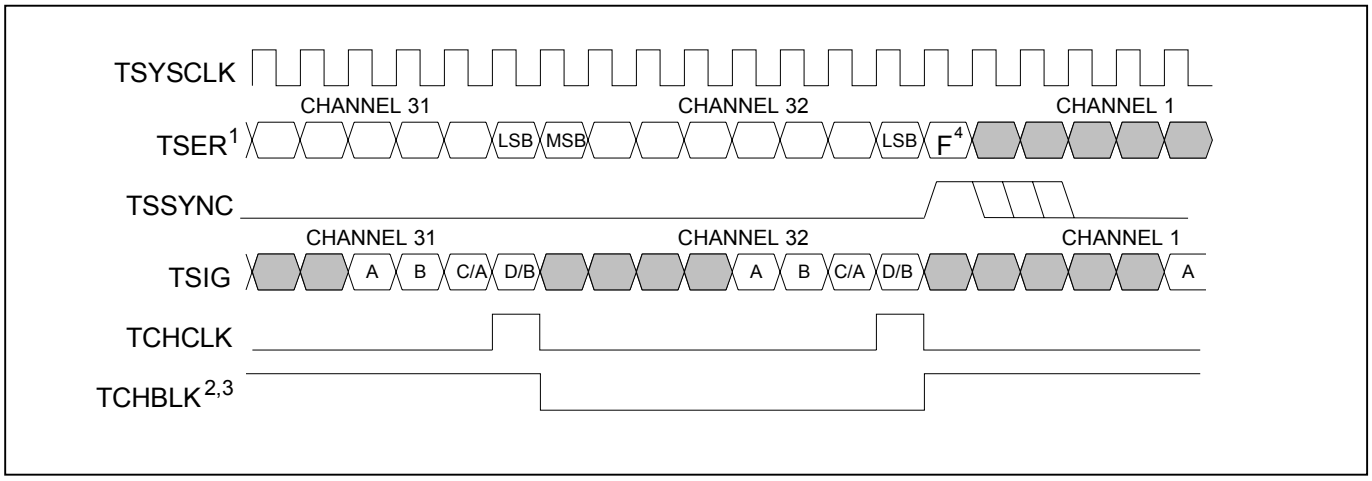

Note 1: TSER data in channels 1, 5, 9, 13, 17, 21, 25, and 29 is ignored.

Note 2: TCHBLK is programmed to block channel 31 (if the TPCSI bit is set, then the signaling data at TSIG will be ignored).

Note 3: TCHBLK is forced to 1 in the same channels as TSER is ignored (see Note 1).

Note 4: The F-bit position for the T1 frame is sampled and passed through the transmit-side elastic store into the MSB bit position of channel 1. (Normally, the transmit-side formatter overwrites the F-bit position unless the formatter is programmed to pass through the F-bit position.)

35.2 E1 Mode

Figure 35-11. Receive-Side Timing

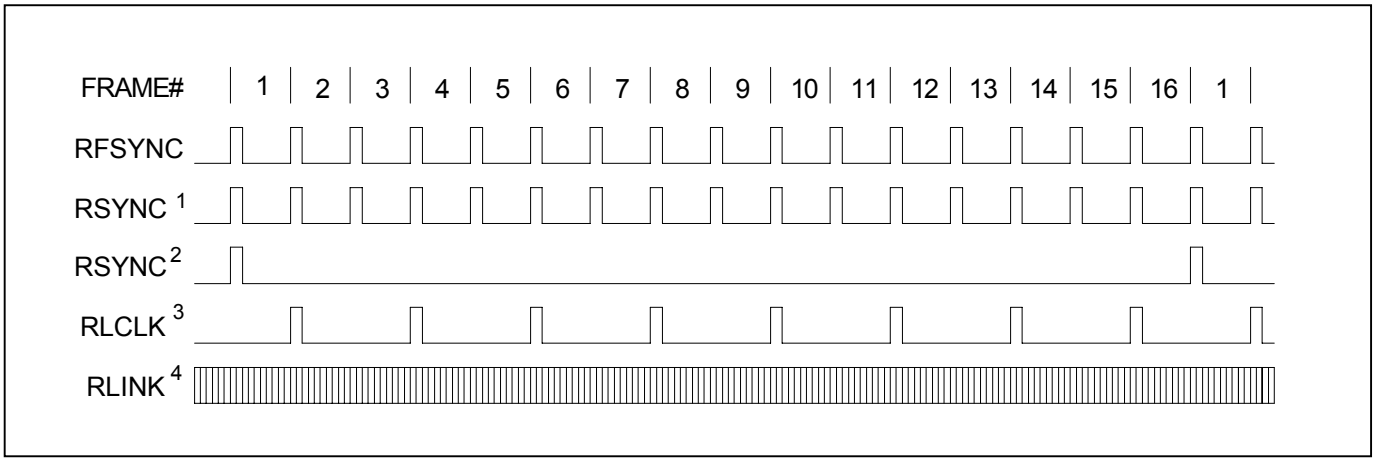

Note 1: RSYNC in frame mode (IOCR1.5 = 0).

Note 2: RSYNC in multiframe mode (IOCR1.5 = 1).

Note 3: RLCLK is programmed to output just the Sa bits.

Note 4: RLINK always outputs all five Sa bits as well as the rest of the receive data stream.

Note 5: This diagram assumes the CAS MF begins in the RAF frame.

Figure 35-12. Receive-Side Boundary Timing (with Elastic Store Disabled)

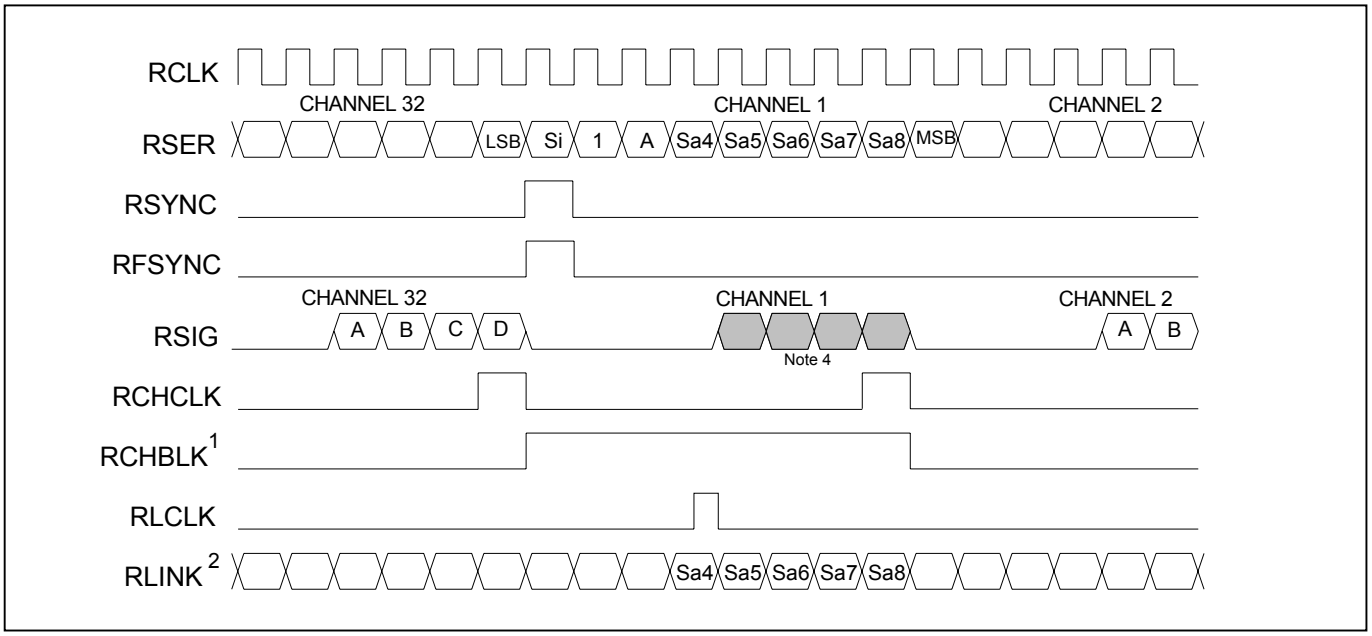

Note 1: RCHBLK is programmed to block channel 1.

Note 2: RLCLK is programmed to mark the Sa4 bit in RLINK.

Note 3: Shown is a RNAF frame boundary.

Note 4: RSIG normally contains the CAS multiframe alignment nibble (0000) in channel 1.

Figure 35-13. Receive-Side Boundary Timing, RSYSCLK = 1.544MHz (Elastic Store Enabled)

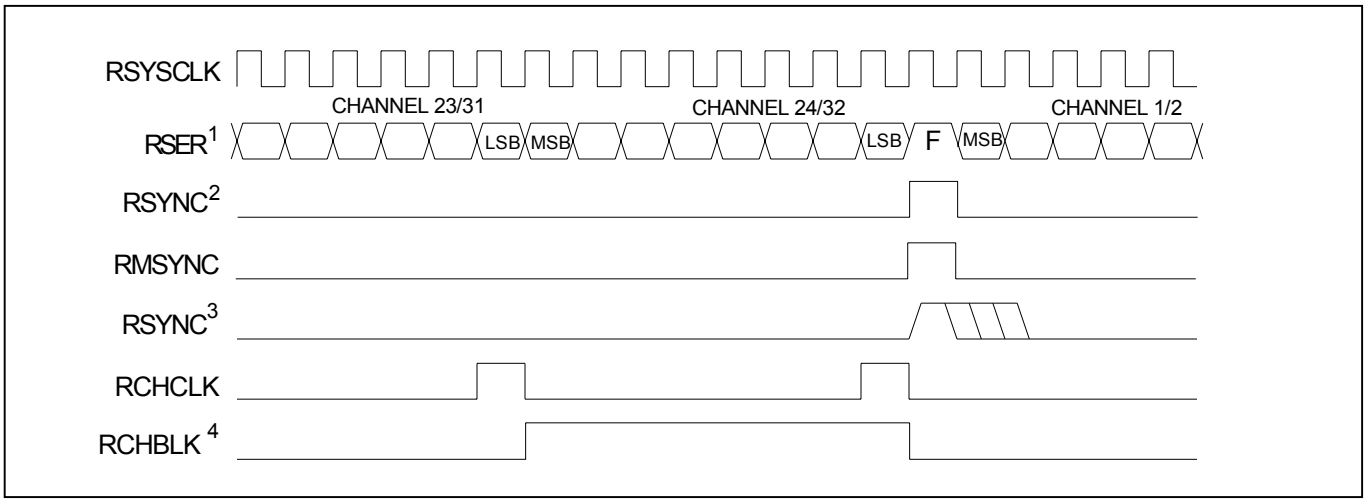

Note 1: Data from the E1 channels 1, 5, 9, 13, 17, 21, 25, and 29 is dropped (channel 2 from the E1 link is mapped to channel 1 of the T1 link, etc.) and the F-bit position is added (forced to on 1).

Note 2: RSYNC in the output mode (IOCR1.4 = 0).

Note 3: RSYNC in the input mode (IOCR1.4 = 1).

Note 4: RCHBLK is programmed to block channel 24.

Figure 35-14. Receive-Side Boundary Timing, RSYSCLK = 2.048MHz (Elastic Store Enabled)

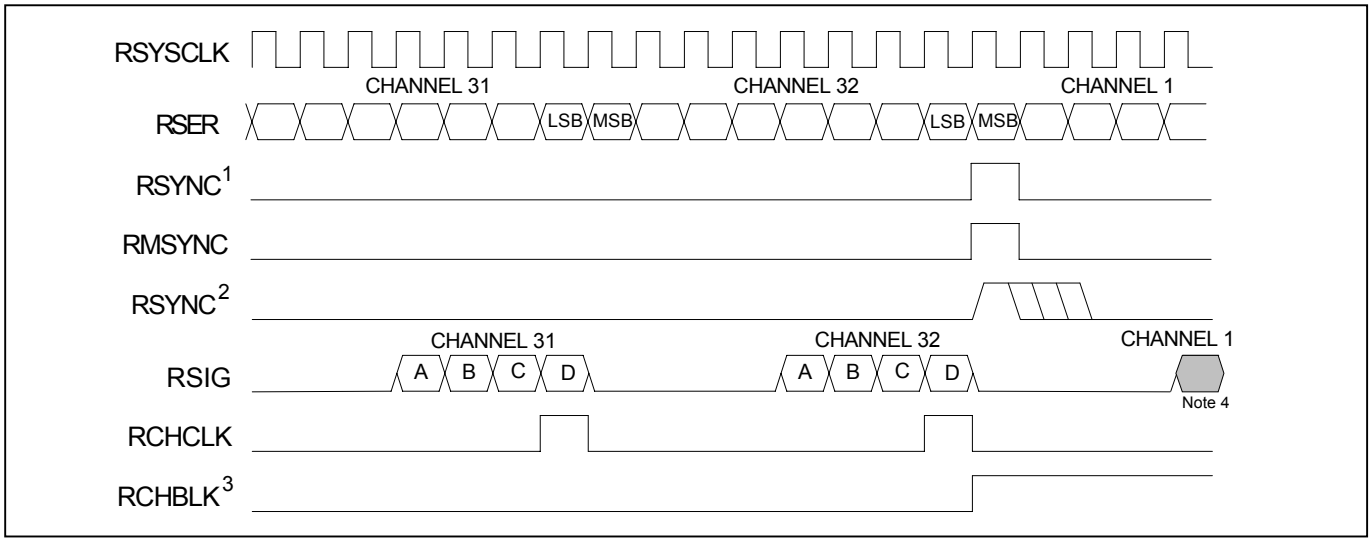

Note 1: RSYNC is in the output mode (IOCR1.4 = 0).

Note 2: RSYNC is in the input mode (IOCR1.4 = 1).

Note 3: RCHBLK is programmed to block channel 1.

Note 4: RSIG normally contains the CAS multiframe alignment nibble (0000) in channel 1.

Figure 35-15. Receive IBO Channel Interleave Mode Timing

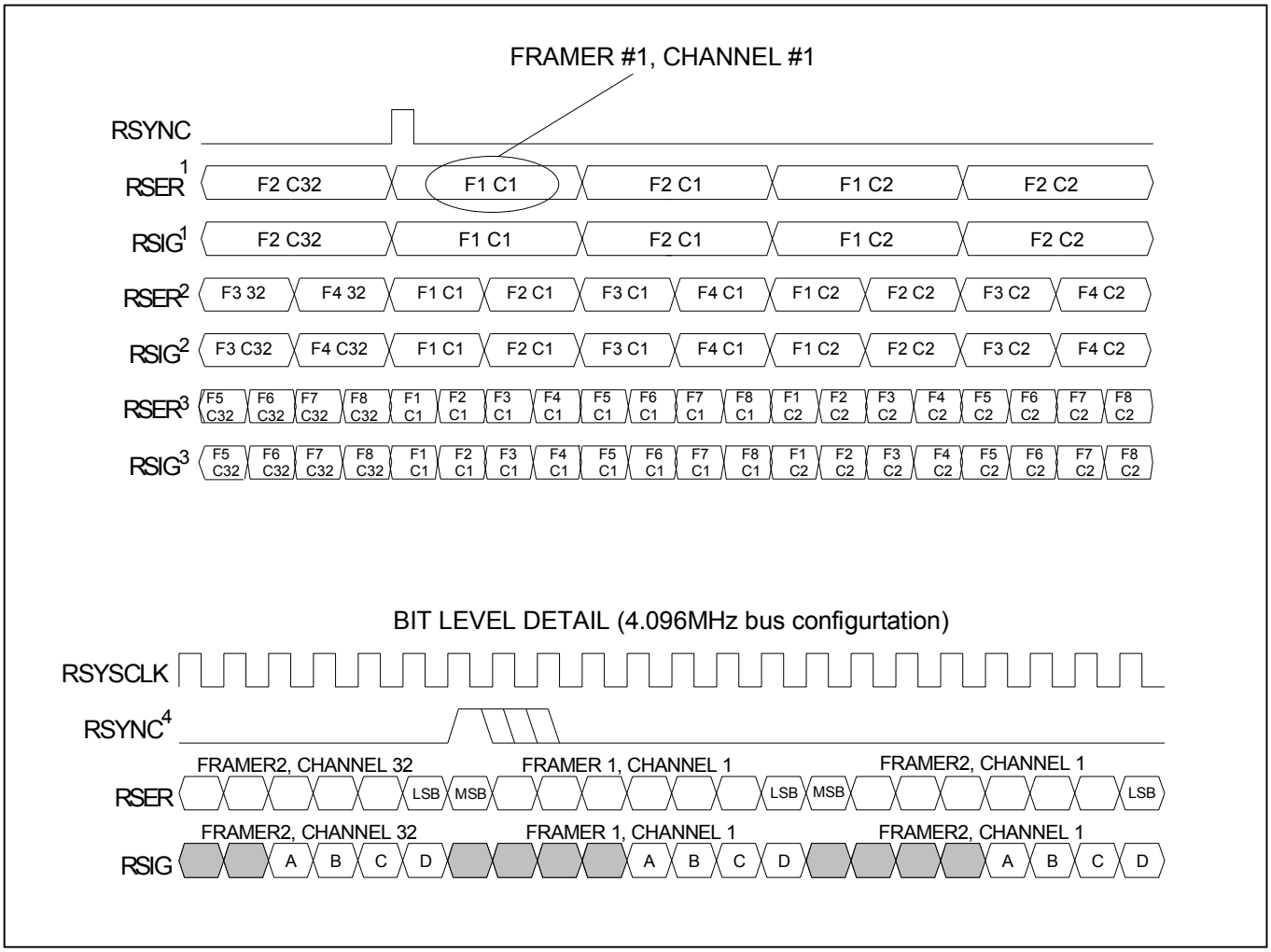

Note 1: 4.096MHz bus configuration.

Note 2: 8.192MHz bus configuration.

Note 3: 16.384MHz bus configuration.

Note 4: RSYNC is in the input mode (IOCR1.4 = 0).

Figure 35-16. Receive IBO Frame Interleave Mode Timing

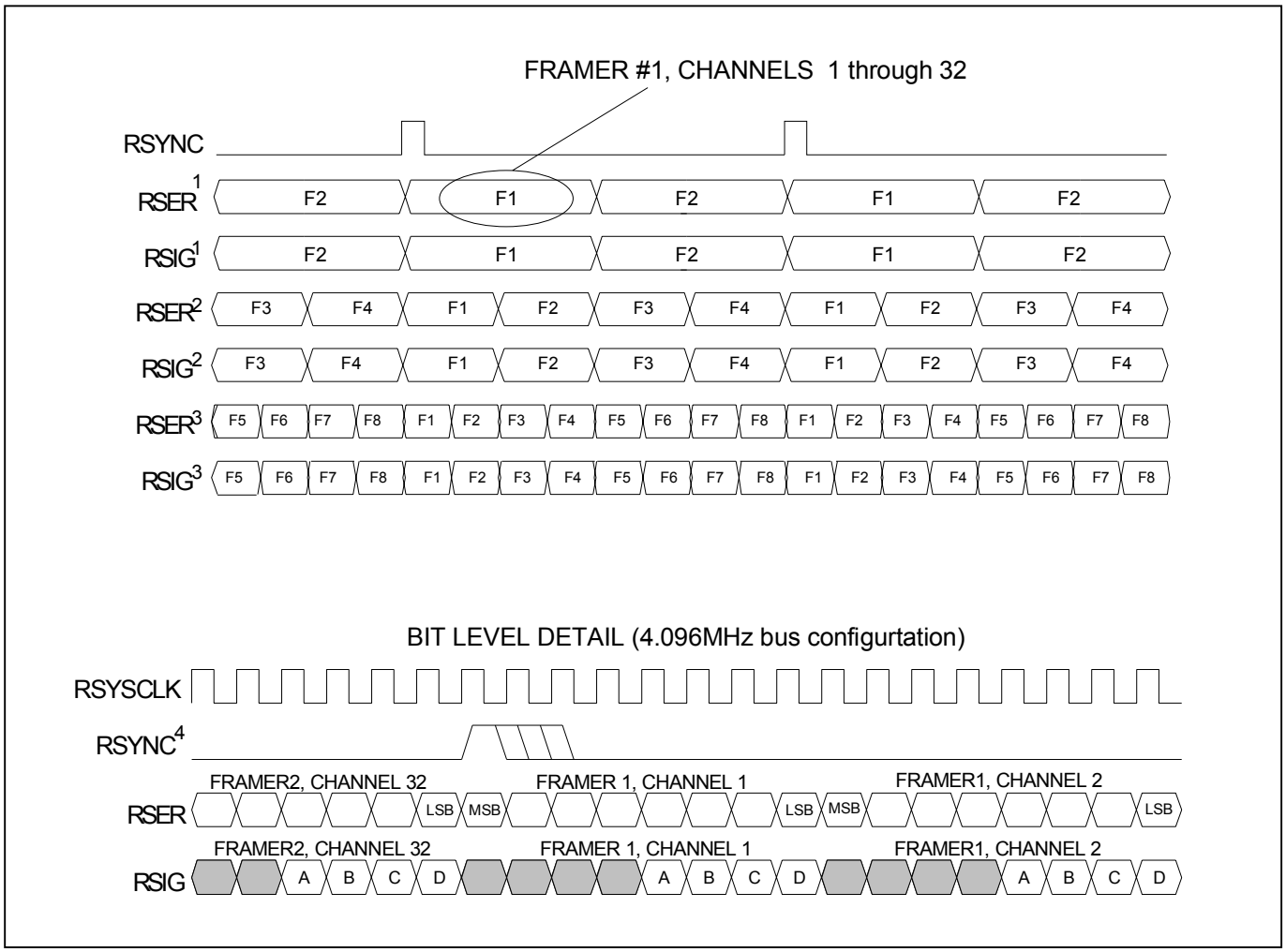

Note 1: 4.096MHz bus configuration.

Note 2: 8.192MHz bus configuration.

Note 3: 16.384MHz bus configuration.

Note 4: RSYNC is in the input mode (IOCR1.4 = 0).

Figure 35-17. G.802 Timing, E1 Mode Only

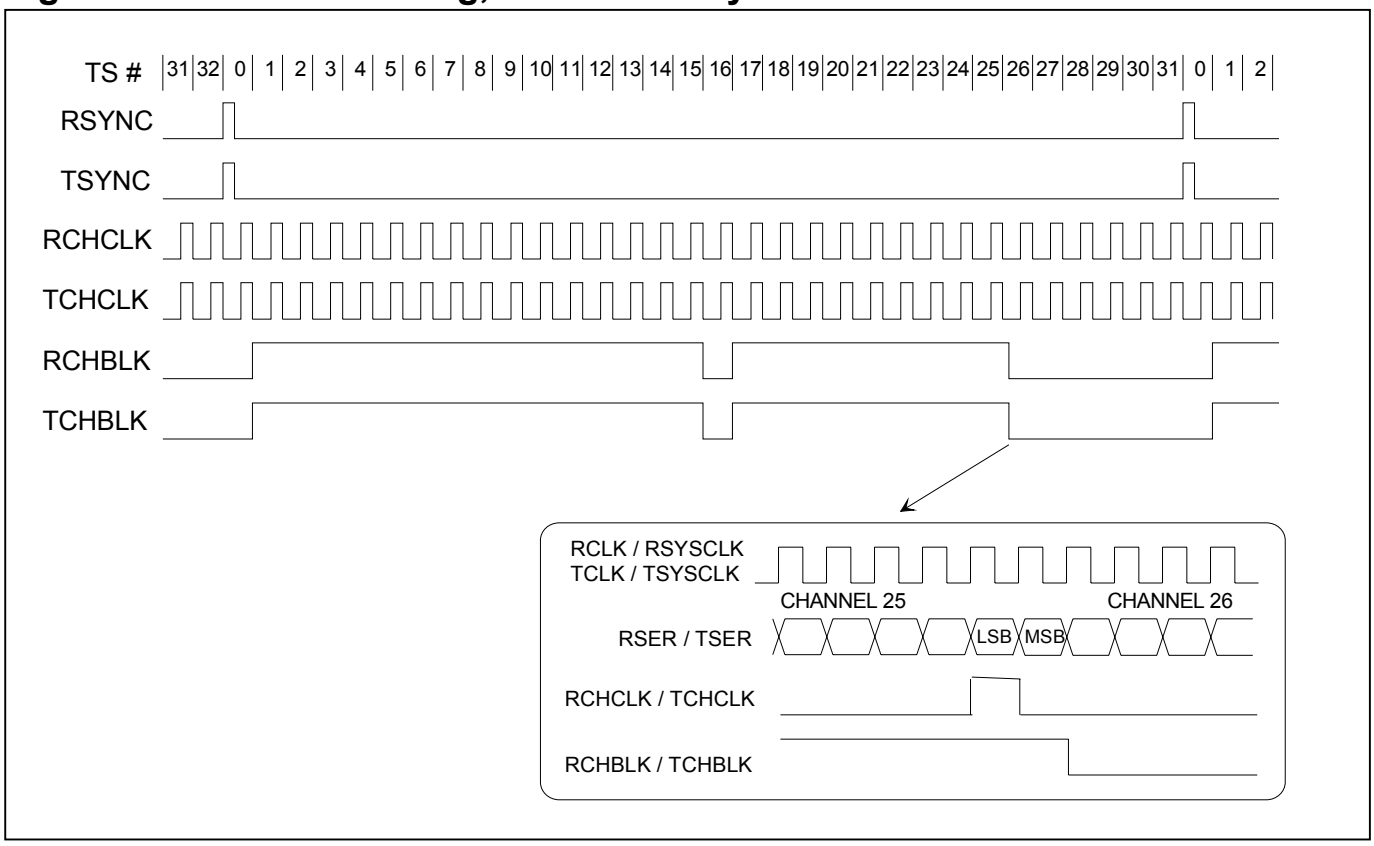

Note 1: RCHBLK or TCHBLK programmed to pulse high during time slots 1 through 15, 17 through 25, and bit 1 of time slot 26.

Figure 35-18. Transmit-Side Timing

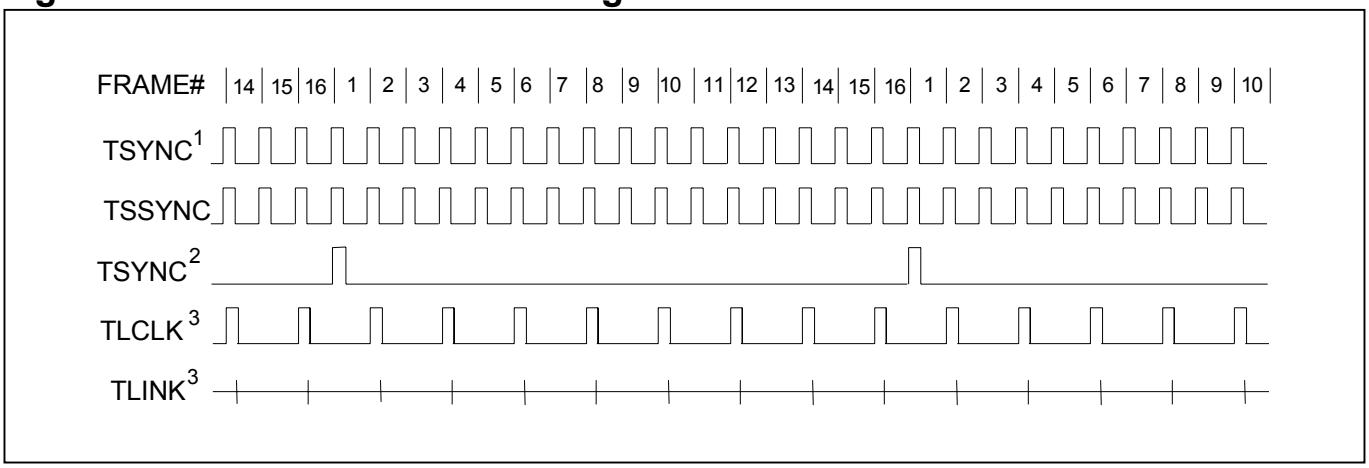

Note 1: TSYNC in frame mode (IOCR1.2 = 0).

Note 2: TSYNC in multiframe mode (IOCR1.2 = 1).

Note 3: TLINK is programmed to source just the Sa4 bit.

Note 4: This diagram assumes both the CAS MF and the CRC4 MF begin with the TAF frame.

Note 5: TLINK and TLCLK are not synchronous with TSSYNC.

Figure 35-19. Transmit-Side Boundary Timing (Elastic Store Disabled)

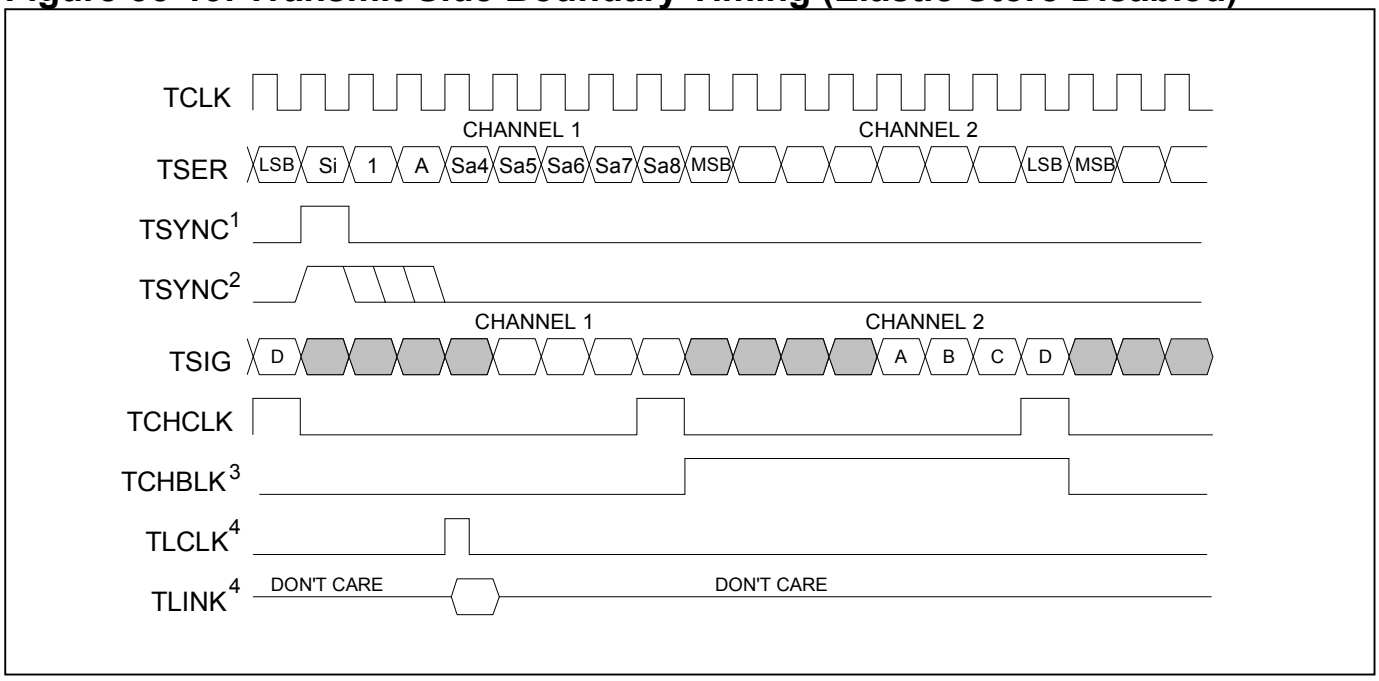

Note 1: TSYNC is in the output mode (IOCR1.1 = 1).

Note 2: TSYNC is in the input mode (IOCR1.1 = 0).

Note 3: TCHBLK is programmed to block channel 2.

Note 4: TLINK is programmed to source the Sa4 bit.

Note 5: The signaling data at TSIG during channel 1 is normally overwritten in the transmit formatter with the CAS MF alignment nibble (0000).

Note 6: Shown is a TNAF frame boundary.

Figure 35-20. Transmit-Side Boundary Timing, TSYSCLK = 1.544MHz (Elastic Store Enabled)

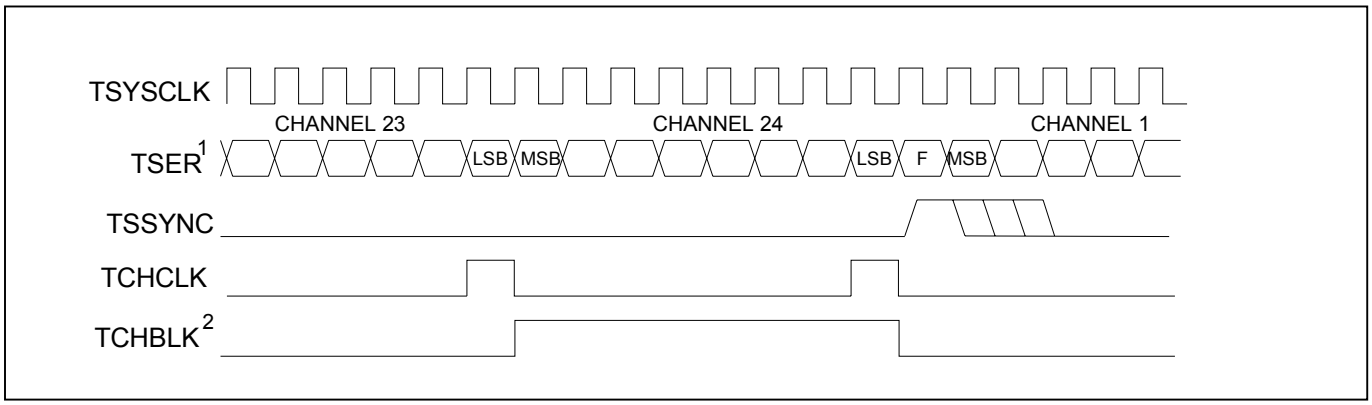

Note 1: The F-bit position in the TSER data is ignored.

Note 2: TCHBLK is programmed to block channel 24.

Figure 35-21. Transmit-Side Boundary Timing, TSYSCLK = 2.048MHz (Elastic Store Enabled)

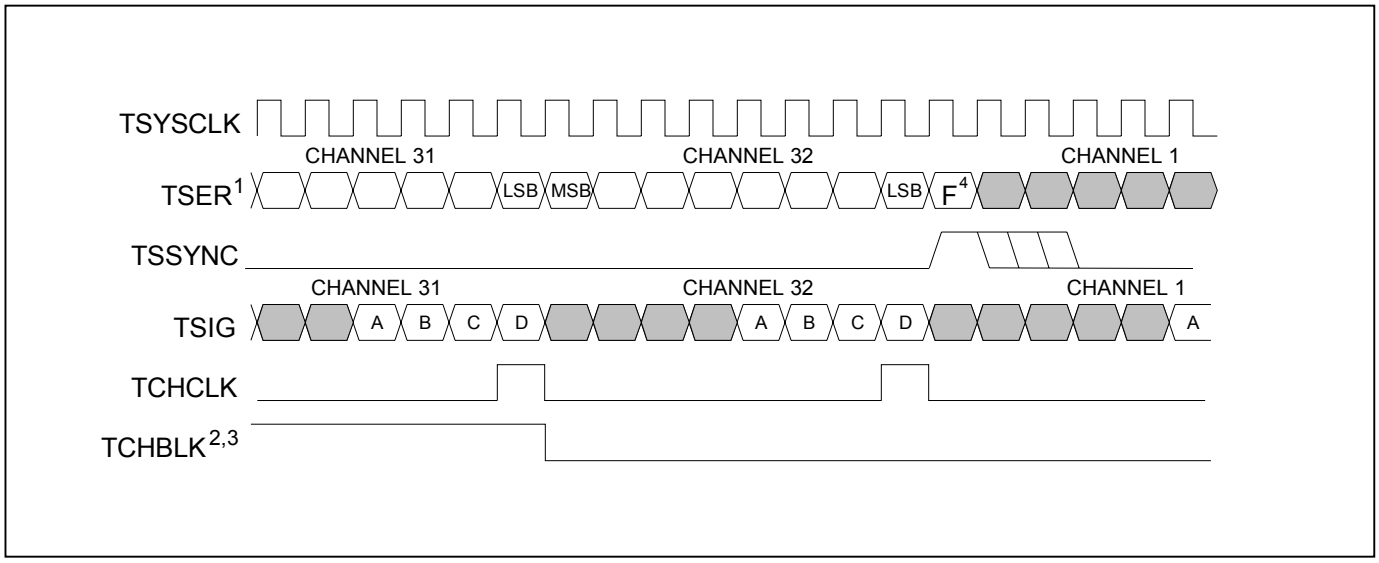

Note 1: TCHBLK is programmed to block channel 31.

Figure 35-22. Transmit IBO Channel Interleave Mode Timing

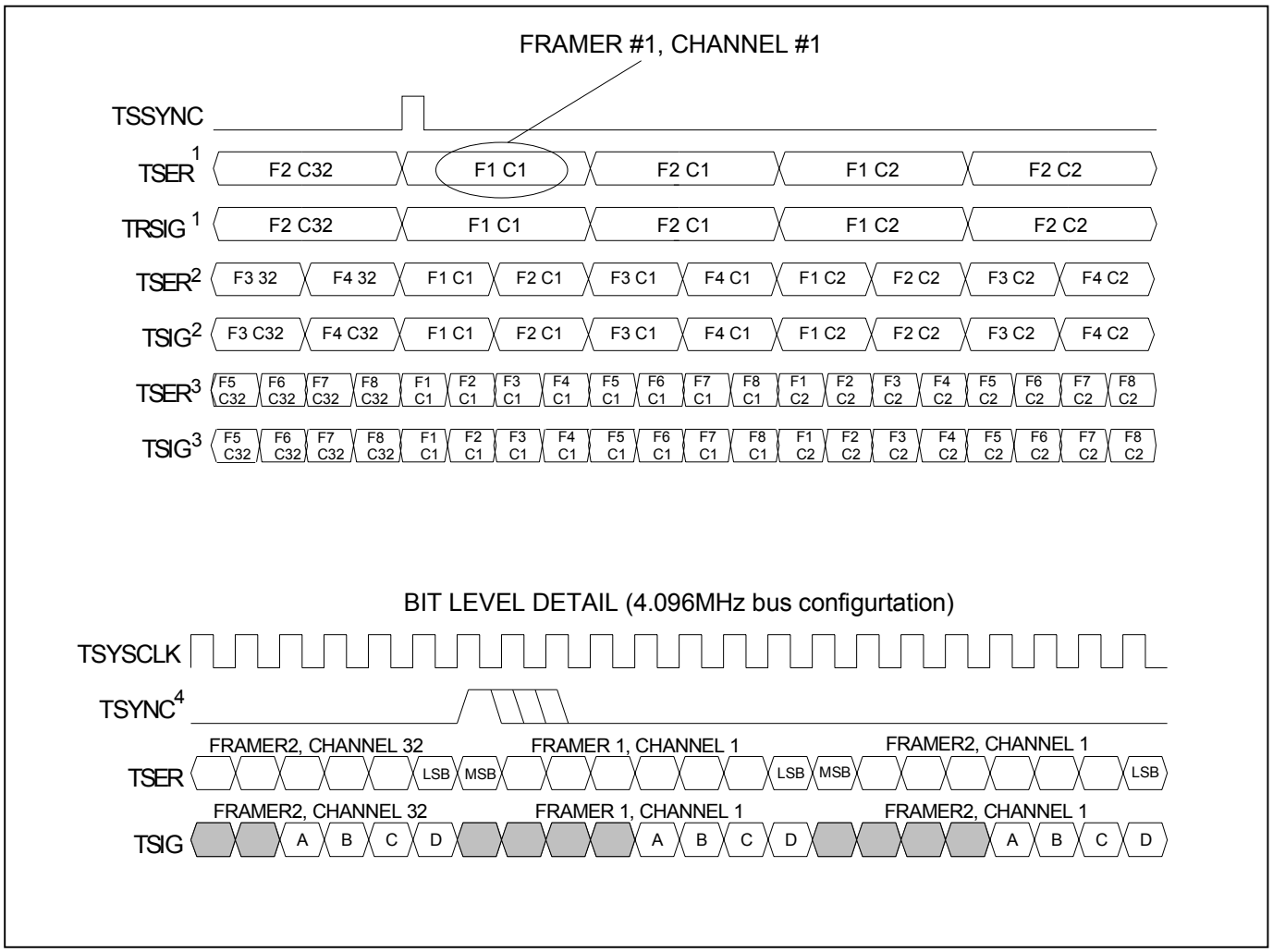

Note 1: 4.096MHz bus configuration.

Note 2: 8.192MHz bus configuration.

Note 3: 16.384MHz bus configuration.

Note 4: TSYNC is in input mode.

Figure 35-23. Transmit IBO Frame Interleave Mode Timing

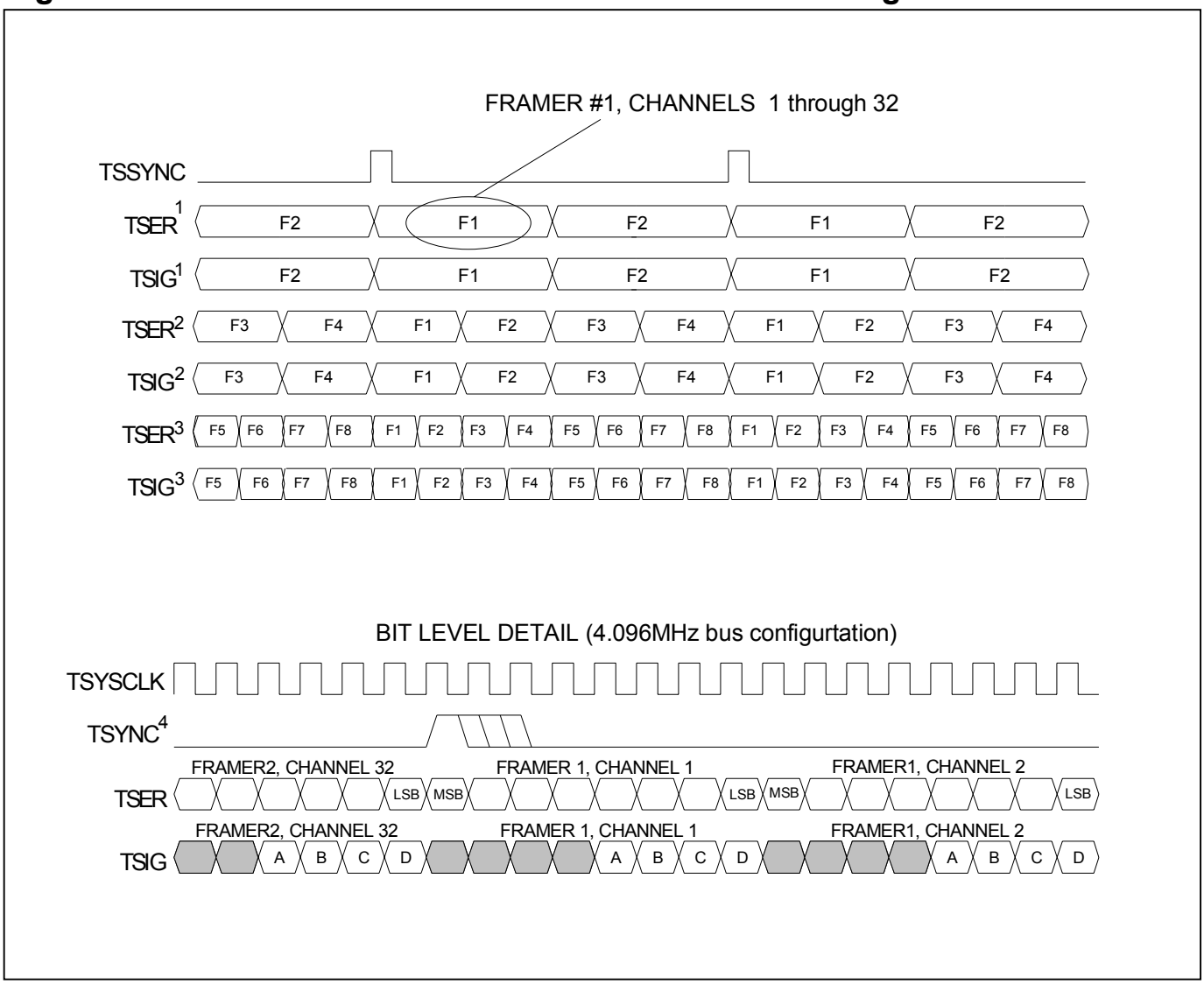

Note 1: 4.096MHz bus configuration.

Note 2: 8.192MHz bus configuration.

Note 3: 16.384MHz bus configuration.

Note 4: TSYNC is in input mode.

36. OPERATING PARAMETERS

ABSOLUTE MAXIMUM RATINGS

Voltage Range on Any Pin Relative to Ground	-1.0V to +6.0V
Operating Temperature Range for DS2155L	0°C to +70°C
Operating Temperature Range for DS2155LN	-40°C to +85°C (Note 1)
Storage Temperature Range	-55°C to +125°C
Soldering Temperature	See IPC/JEDEC J-STD-020

This is a stress rating only and functional operation of the device at these or any other conditions above those indicated in the operation sections of this specification is not implied. Exposure to absolute maximum rating conditions for extended periods of time may affect reliability.

Note 1: Specifications to -40°C are guaranteed by design and not production tested.

THERMAL CHARACTERISTICS

PARAMETER	CONDITIONS	MIN	TYP	MAX
Ambient Temperature	(Note 2)	-40°C		+85°C
Junction Temperature				+125°C
Theta-JA (θ_{JA}) in Still Air for 100-Pin LQFP	(Note 3)		+32°C/W	
Theta-JA (θ_{JA}) in Still Air for 10mm CSBGA	(Note 3)		+40°C/W	

THETA-JA (θ_{JA}) vs. AIRFLOW

FORCED AIR (meters per second)	THETA-JA (θ_{JA}) 100-PIN LQFP	THETA-JA (θ_{JA}) 10mm CSBGA
0	+32°C/W	40°C/W
1	+27°C/W	34°C/W
2.5	+24°C/W	30°C/W

RECOMMENDED DC OPERATING CONDITIONS

(T_A = 0°C to +70°C for DS2155L; T_A = -40°C to +85°C for DS2155LN.)

PARAMETER	SYMBOL	CONDITIONS	MIN	TYP	MAX	UNITS
Logic 1	V_{IH}		2.0		5.5	V
Logic 0	V_{IL}		-0.3		+0.8	V
Supply	V_{DD}	(Note 4)	3.135	3.3	3.465	V

CAPACITANCE

(T_A = +25°C)

PARAMETER	SYMBOL	CONDITIONS	MIN	TYP	MAX	UNITS
Input Capacitance	C_{IN}			5		pF
Output Capacitance	C_{OUT}			7		pF

DC CHARACTERISTICS

(V_{DD} = 3.3V ±5%, T_A = 0°C to +70°C for DS2155L; V_{DD} = 3.3V ±5%, T_A = -40°C to +85°C for DS2155LN.)

PARAMETER	SYMBOL	CONDITIONS	MIN	TYP	MAX	UNITS
Supply Current	I_{DD}	(Note 5)		75		mA
Input Leakage	I_{IL}	(Note 6)	-1.0		+1.0	µA
Output Leakage	I_{LO}	(Note 7)			1.0	µA
Output Current (2.4V)	I_{OH}		-1.0			mA
Output Current (0.4V)	I_{OL}		+4.0			mA

Note 2: The package is mounted on a four-layer JEDEC standard test board.

Note 3: Theta-JA (θ_{JA}) is the junction to ambient thermal resistance, when the package is mounted on a four-layer JEDEC standard test board.

Note 4: Applies to RV_{DD}, TV_{DD}, and DV_{DD}.

Note 5: TCLK = TCLKI = RCLKI = TSYSCLK = RSYSCLK = MCLK = 1.544MHz; outputs open-circuited.

Note 6: 0.0V < V_{IN} < V_{DD}

Note 7: Applied to $\overline{INT}$ when tri-stated.

37. AC TIMING PARAMETERS AND DIAGRAMS

Capacitive test loads are 40pF for bus signals, 20pF for all others.

37.1 Multiplexed Bus AC Characteristics

AC CHARACTERISTICS: MULTIPLEXED PARALLEL PORT (MUX = 1)

(Figure 37-1, Figure 37-2, and Figure 37-3)

(V_{DD} = 3.3V ±5%, T_A = 0°C to +70°C for DS2155L; V_{DD} = 3.3V ±5%, T_A = -40°C to +85°C for DS2155LN.)

PARAMETER	SYMBOL	CONDITIONS	MIN	TYP	MAX	UNITS
Cycle Time	t_{CYC}		200			ns
Pulse Width, DS Low or $\overline{RD}$ High	PW_{EL}		100			ns
Pulse Width, DS High or $\overline{RD}$ Low	PW_{EH}		100			ns
Input Rise/Fall Times	t_R, t_F				20	ns
R/$\overline{W}$ Hold Time	t_{RWH}		10			ns
R/$\overline{W}$ Setup Time Before DS High	t_{RWS}		50			ns
$\overline{CS}$ Setup Time Before DS, $\overline{WR}$, or $\overline{RD}$ Active	t_{CS}		20			ns
$\overline{CS}$ Hold Time	t_{CH}		0			ns
Read Data Hold Time	t_{DHR}		10		50	ns
Write Data Hold Time	t_{DHW}		0			ns
Muxed Address Valid to AS or ALE Fall	t_{ASL}		15			ns
Muxed Address Hold Time	t_{AHL}		10			ns
Delay Time DS, $\overline{WR}$, or $\overline{RD}$ to AS or ALE Rise	t_{ASD}		20			ns
Pulse Width AS or ALE High	PW_{ASH}		30			ns
Delay Time, AS or ALE to DS, $\overline{WR}$ or $\overline{RD}$	t_{ASED}		10			ns
Output Data Delay Time from DS or $\overline{RD}$	t_{DDR}		20		80	ns
Data Setup Time	t_{DSW}		50			ns

Figure 37-1. Intel Multiplexed Bus Read Timing (BTS = 0/MUX = 1)

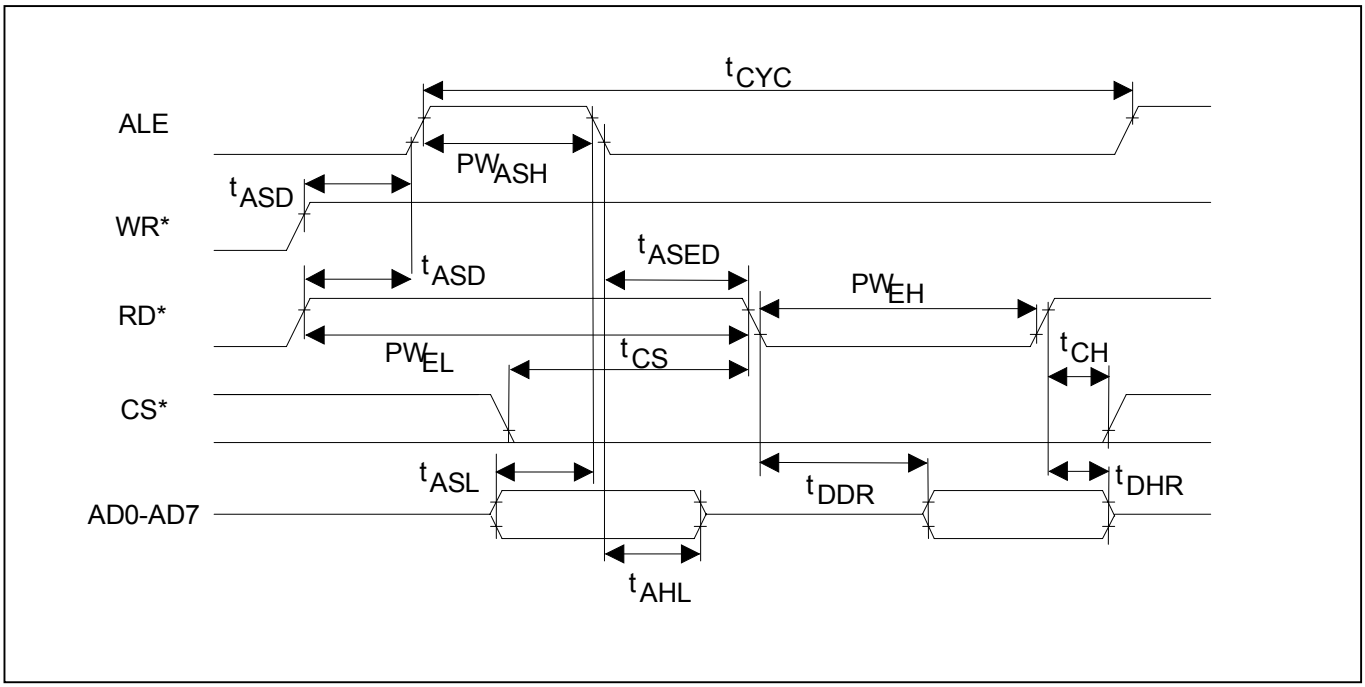

Figure 37-2. Intel Multiplexed Bus Write Timing (BTS = 0/MUX = 1)

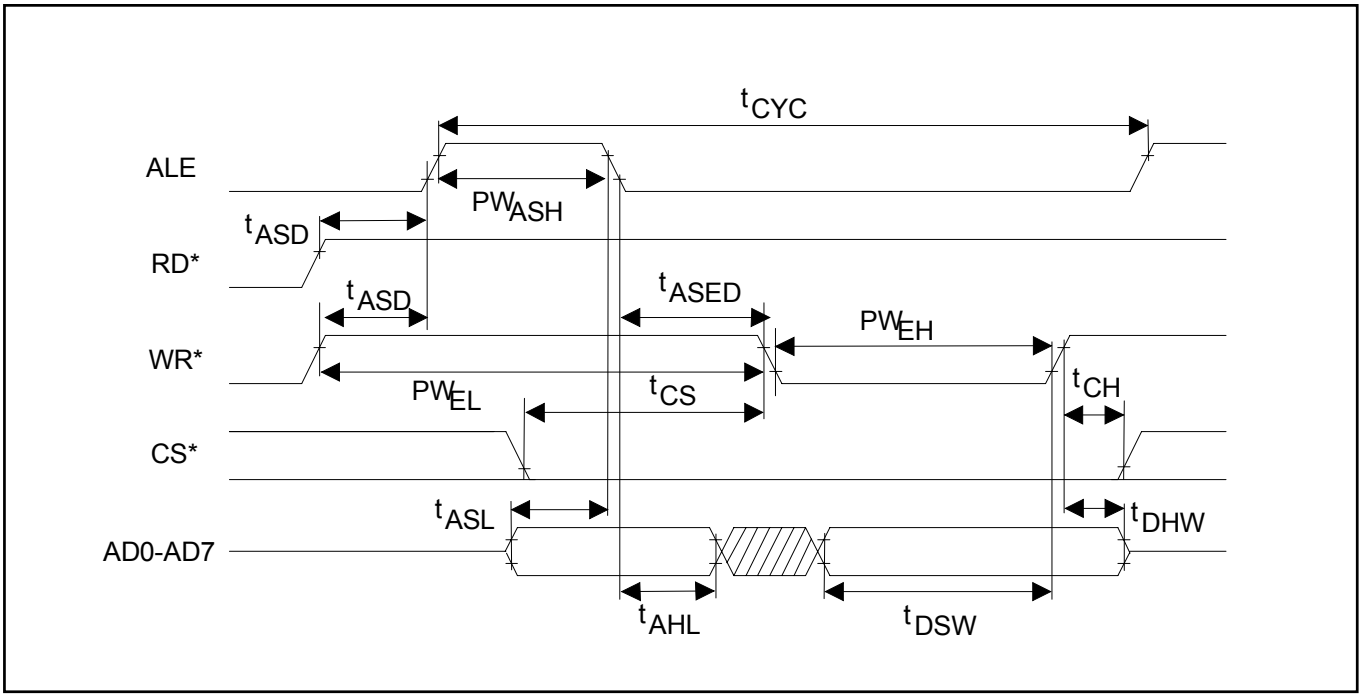

Figure 37-3. Motorola Multiplexed Bus Timing (BTS = 1/MUX = 1)

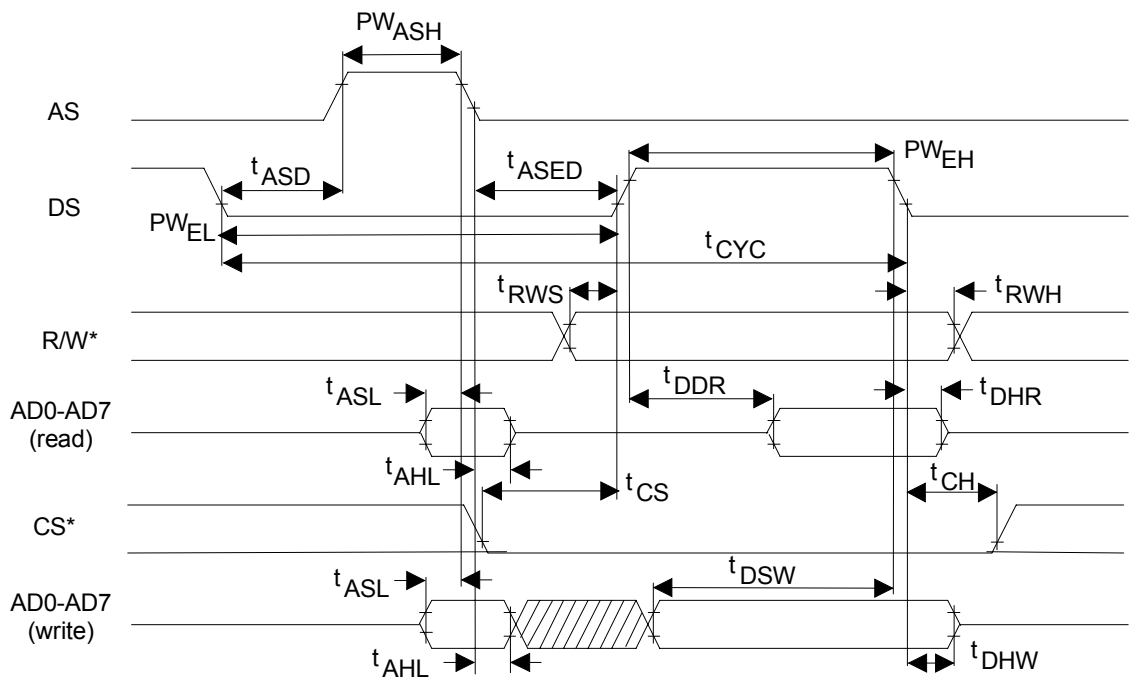

37.2 Nonmultiplexed Bus AC Characteristics

AC CHARACTERISTICS: NONMULTIPLEXED PARALLEL PORT (MUX = 0)

(Figure 37-4, Figure 37-5, Figure 37-6, and Figure 37-7)

(V_{DD} = 3.3V ±5%, T_A = 0°C to +70°C for DS2155L; V_{DD} = 3.3V ±5%, T_A = -40°C to +85°C; for DS2155LN.)

PARAMETER	SYMBOL	CONDITIONS	MIN	TYP	MAX	UNITS
Setup Time for A0 to A7, Valid to $\overline{CS}$ Active	t1		0			ns
Setup Time for $\overline{CS}$ Active to Either $\overline{RD}$, $\overline{WR}$, or $\overline{DS}$ Active	t2		0			ns
Delay Time from Either $\overline{RD}$ or $\overline{DS}$ Active to Data Valid	t3				75	ns
Hold Time from Either $\overline{RD}$, $\overline{WR}$, or $\overline{DS}$ Inactive to $\overline{CS}$ Inactive	t4		0			ns
Hold Time from $\overline{CS}$ Inactive to Data Bus Tri-State	t5		5		20	ns
Wait Time from Either $\overline{WR}$ or $\overline{DS}$ Active to Latch Data	t6		75			ns
Data Setup Time to Either $\overline{WR}$ or $\overline{DS}$ Inactive	t7		10			ns
Data Hold Time from Either $\overline{WR}$ or $\overline{DS}$ Inactive	t8		10			ns
Address Hold from Either $\overline{WR}$ or $\overline{DS}$ Inactive	t9		10			ns

Figure 37-4. Intel Nonmultiplexed Bus Read Timing (BTS = 0/MUX = 0)

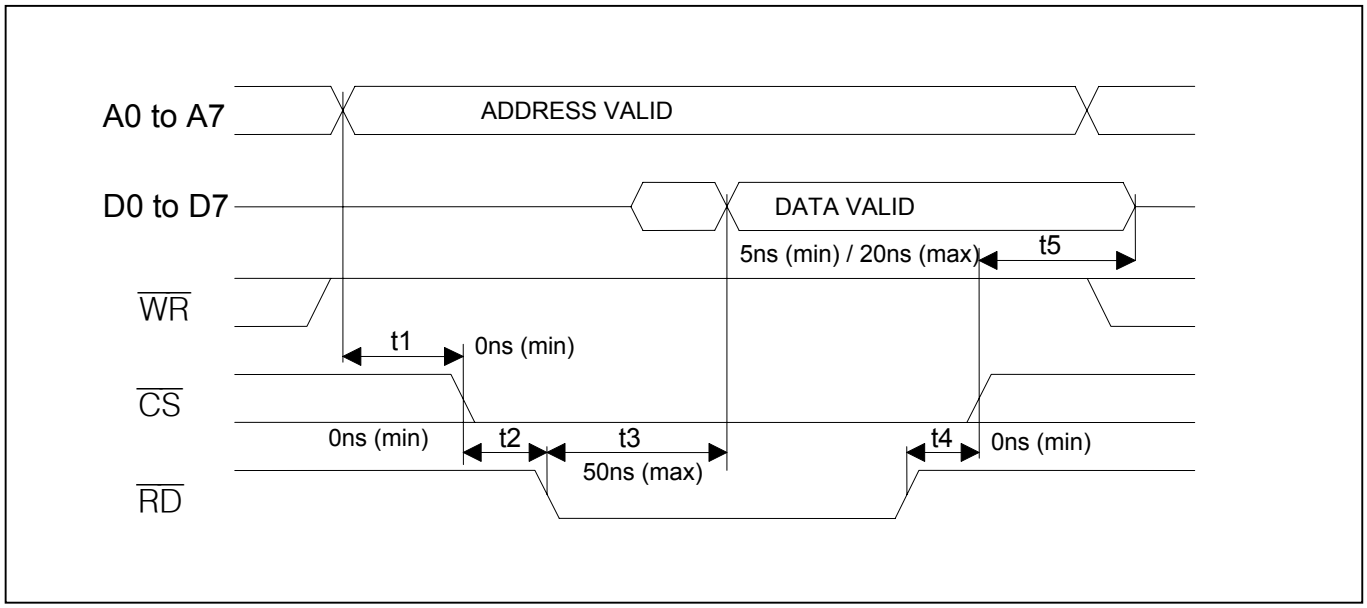

Figure 37-5. Intel Nonmultiplexed Bus Write Timing (BTS = 0/MUX = 0)

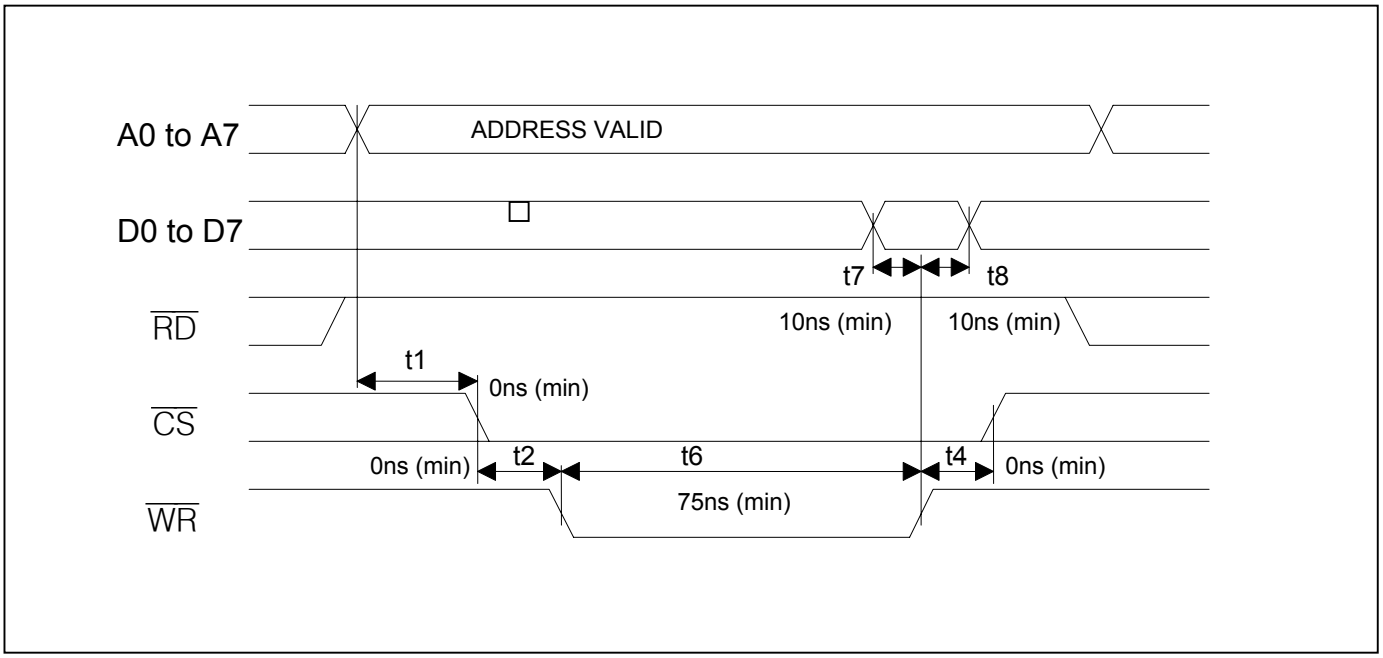

Figure 37-6. Motorola Nonmultiplexed Bus Read Timing (BTS = 1/MUX = 0)

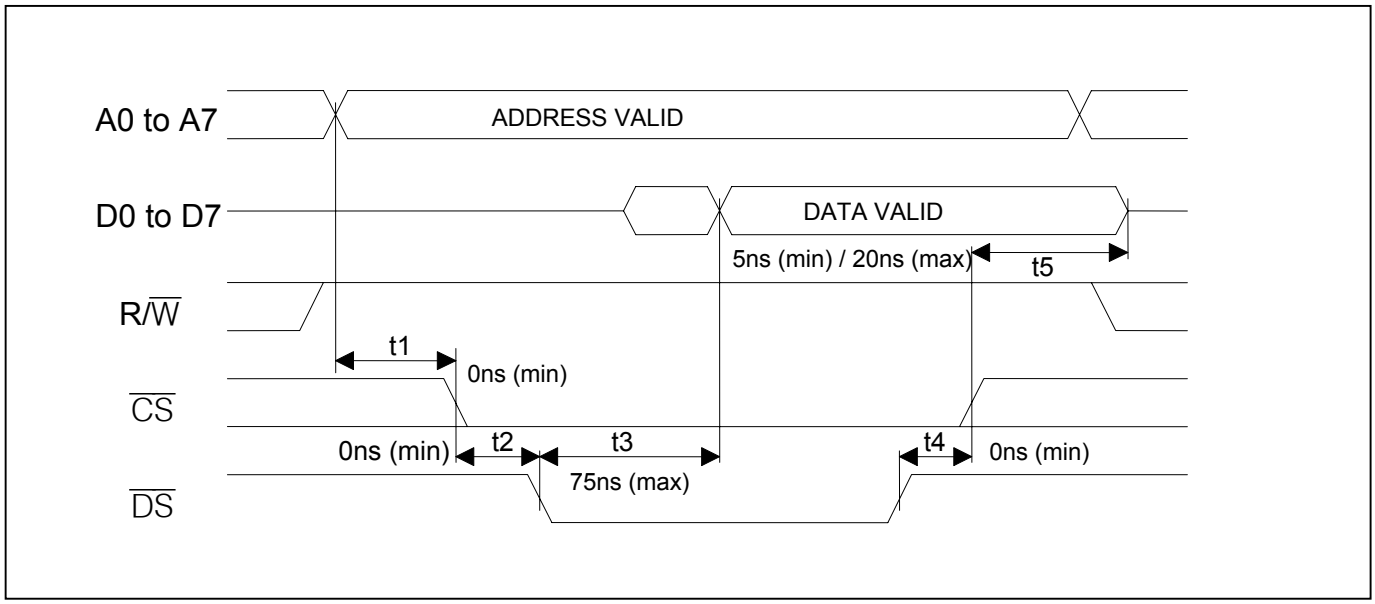

Figure 37-7. Motorola Nonmultiplexed Bus Write Timing (BTS = 1/MUX = 0)

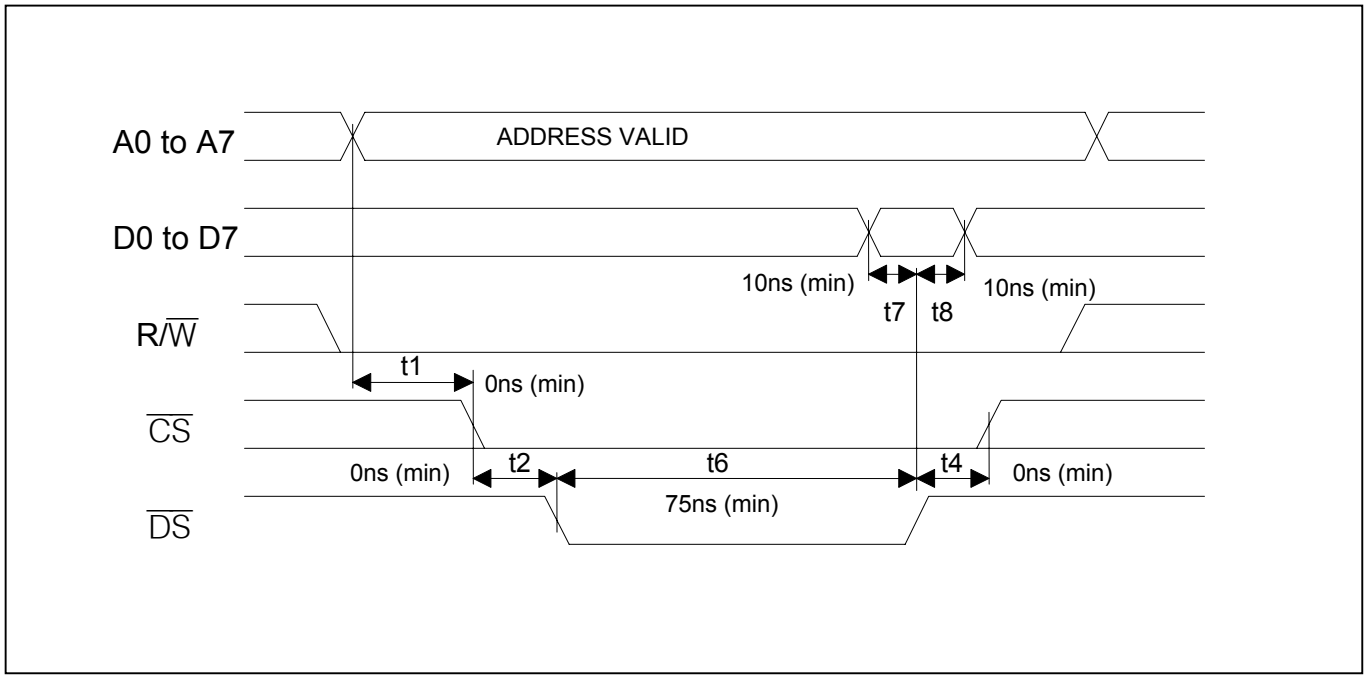

37.3 Receive-Side AC Characteristics

AC CHARACTERISTICS: RECEIVE SIDE

(Figure 37-8., Figure 37-9, and Figure 37-10)

(V_{DD} = 3.3V ±5%, T_A = 0°C to +70°C for DS2155L; V_{DD} = 3.3V ±5%, T_A = -40°C to +85°C for DS2155LN.)

PARAMETER	SYMBOL	CONDITIONS	MIN	TYP	MAX	UNITS
RCLKO Period	t_{LP}			488 (E1)		ns
				648 (T1)		
RCLKO Pulse Width	t_{LH}	(Note 1)	200	0.5 t_{LP}		ns
	t_{LL}	(Note 1)	200	0.5 t_{LP}		
RCLKO Pulse Width	t_{LH}	(Note 2)	150	0.5 t_{LP}		ns
	t_{LL}	(Note 2)	150	0.5 t_{LP}		
RCLKI Period	t_{CP}			488 (E1)		ns
				648 (T1)		
RCLKI Pulse Width	t_{CH}		20	0.5 t_{CP}		ns
	t_{CL}		20	0.5 t_{CP}		
RSYSCLK Period	t_{SP}	(Note 3)		648		
		(Note 4)		488		ns
		(Note 5)		244		ns
		(Note 6)		122		
		(Note 7)		61		
RSYSCLK Pulse Width	t_{SH}		20	0.5 t_{SP}		ns
	t_{SL}		20	0.5 t_{SP}		ns
RSYNC Setup to RSYSCLK Falling	t_{SU}		20			ns
RSYNC Pulse Width	t_{PW}		50			ns
RPOSI/RNEGI Setup to RCLKI Falling	t_{SU}		20			ns
RPOSI/RNEGI Hold From RCLKI Falling	t_{HD}		20			ns
RSYSCLK, RCLKI Rise and Fall Times	t_R, t_F				22	ns
Delay RCLKO to RPOSO, RNEGO Valid	t_{DD}				50	ns
Delay RCLK to RSER, RDATA, RSIG, RLINK Valid	t_{D1}				50	ns
Delay RCLK to RCHCLK, RSYNC, RCHBLK, RFSYNC, RLCLK	t_{D2}				50	ns
Delay RSYSCLK to RSER, RSIG Valid	t_{D3}				22	ns
Delay RSYSCLK to RCHCLK, RCHBLK, RMSYNC, RSYNC	t_{D4}				22	ns

Note 1: Jitter attenuator enabled in the receive path.

Note 2: Jitter attenuator disabled or enabled in the transmit path.

Note 3: RSYSCLK = 1.544MHz

Note 4: RSYSCLK = 2.048MHz

Note 5: RSYSCLK = 4.096MHz

Note 6: RSYSCLK = 8.192MHz

Note 7: RSYSCLK = 16.384MHz

Figure 37-8. Receive-Side Timing

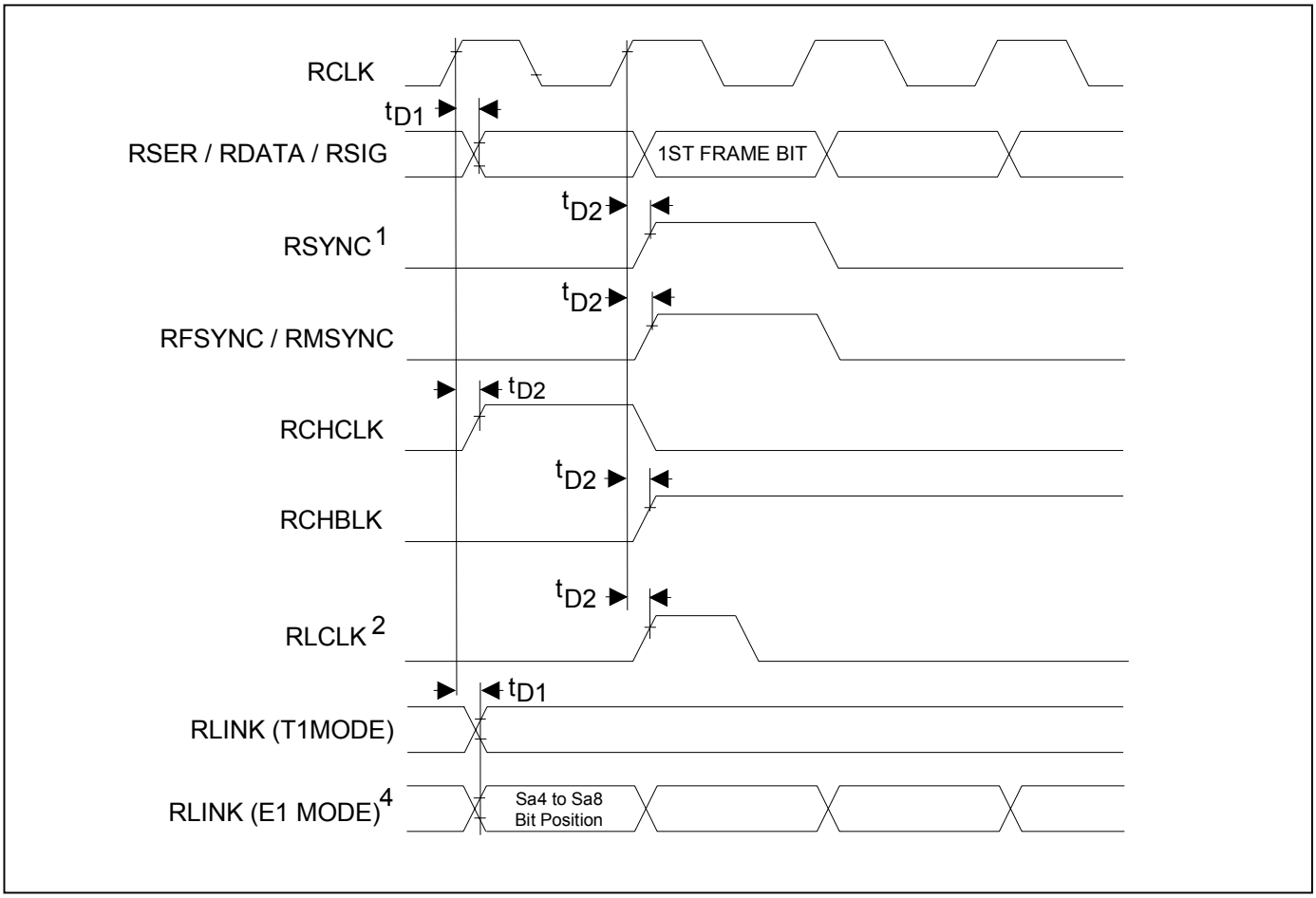

Note 1: RSYNC is in the output mode.

Note 2: Shown is RLINK/RLCLK in the ESF framing mode.

Note 3: No relationship between RCHCLK and RCHBLK and other signals is implied.

Note 4: RLCLK only pulses high during Sa bit locations as defined in the E1RCR2 register.

Figure 37-9. Receive-Side Timing, Elastic Store Enabled

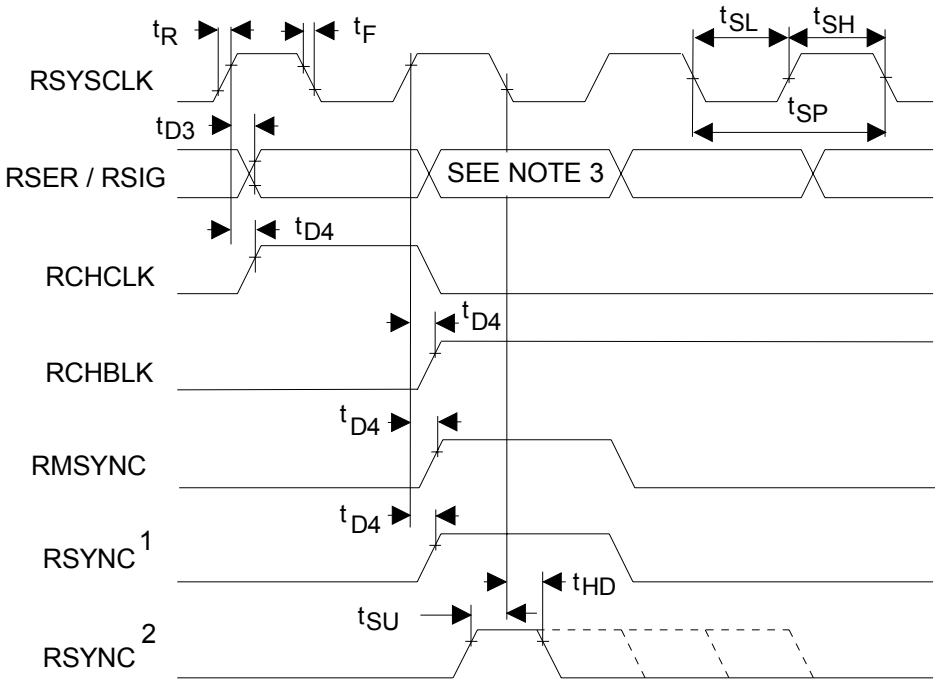

Note 1: RSYNC is in the output mode.

Note 2: RSYNC is in the input mode.

Note 3: F-bit when MSTRREG.1 = 0, MSB of TS0 when MSTREG.1 = 1.

Figure 37-10. Receive Line Interface Timing

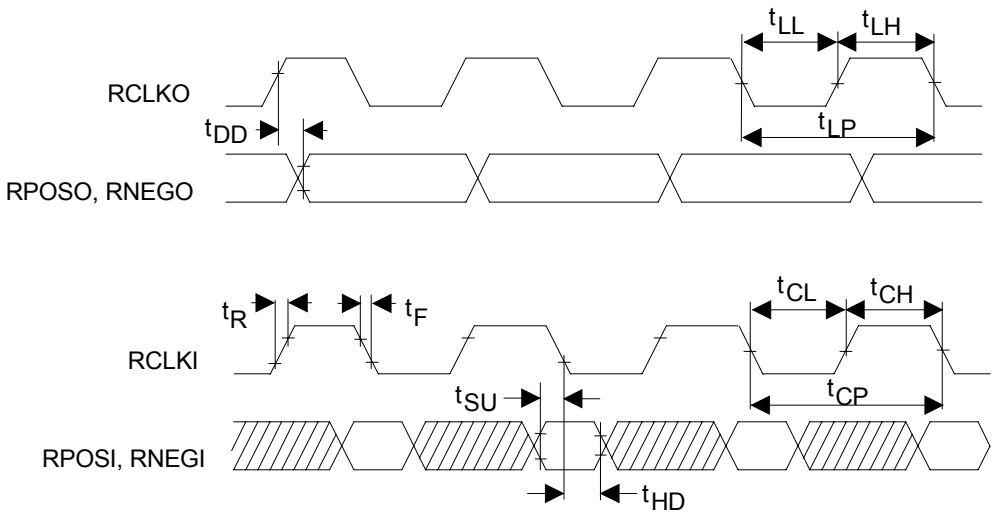

37.4 Backplane Clock Timing: AC Characteristics

AC CHARACTERISTICS: BACKPLANE CLOCK SYNTHESIS

(Figure 37-11)

(V_{DD} = 3.3V ±5%, T_A = 0°C to +70°C for DS2155L; V_{DD} = 3.3V ±5%, T_A = -40°C to +85°C for DS2155LN.)

PARAMETER	SYMBOL	CONDITIONS	MIN	TYP	MAX	UNITS
Delay RCLK to BPCLK	t_{D1}				10	ns

Figure 37-11 Receive Timing Delay RCLK to BPCLK

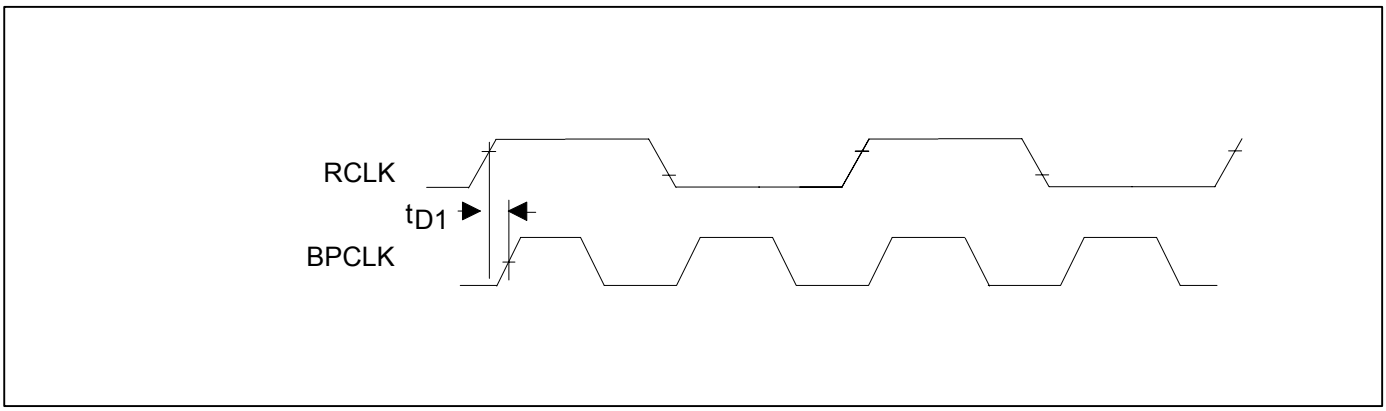

Note 1: If RCLK is 1.544 MHz, BPCLK will be asynchronous.

37.5 Transmit AC Characteristics

AC CHARACTERISTICS: TRANSMIT SIDE

(Figure 37-12, Figure 37-13, and Figure 37-14)

(V_{DD} = 3.3V ±5%, T_A = -40°C to +85°C for DS2155L; V_{DD} = 3.3V ±5%, T_A = 0°C to +70°C for DS2155LN)

PARAMETER	SYMBOL	CONDITIONS	MIN	TYP (E1)	MAX	UNITS
TCLK Period	t_{CP}			488 (E1)		ns
				648 (T1)		
TCLK Pulse Width	t_{CH}		20	0.5 t_{CP}		ns
	t_{CL}		20	0.5 t_{CP}		
TCLKI Period	t_{LP}			488 (E1)		ns
				648 (T1)		
TCLKI Pulse Width	t_{LH}		20	0.5 t_{LP}		ns
	t_{LL}		20	0.5 t_{LP}		
TSYSCLK Period	t_{SP}	(Note 8)		648		ns
		(Note 9)		448		
		(Note 10)		244		
		(Note 11)		122		
		(Note 12)		61		
TSYSCLK Pulse Width	t_{SP}		20	0.5 t_{SP}		ns
			20	0.5 t_{SP}		
TSYNC or TSSYNC Setup to TCLK or TSYSCLK Falling	t_{SU}		20			ns
TSYNC or TSSYNC Pulse Width	t_{PW}		50			ns
TSER, TSIG, TDATA, TLINK, TPOSI, TNEGI Setup to TCLK, TSYSCLK, TCLKI Falling	t_{SU}		20			ns
TSER, TSIG, TDATA, TLINK Hold from TCLK or TSYSCLK Falling	t_{HD}		20			ns
TPOSI, TNEGI Hold from TCLKI Falling	t_{HD}		20			ns
TCLK, TCLKI or TSYSCLK Rise and Fall Times	t_R, t_F				25	ns
Delay TCLKO to TPOSO, TNEGO Valid	t_{DD}				50	ns
Delay TCLK to TESO, UT-UTDO Valid	t_{D1}				50	ns
Delay TCLK to TCHBLK, TCHCLK, TSYNC, TLCLK	t_{D2}				50	ns
Delay TSYSCLK to TCHCLK, TCHBLK	t_{D3}				22	ns

Note 8: TSYSCLK = 1.544MHz

Note 9: TSYSCLK = 2.048MHz

Note 10: TSYSCLK = 4.096MHz

Note 11: TSYSCLK = 8.192MHz

Note 12: TSYSCLK = 16.384MHz

Figure 37-12. Transmit-Side Timing

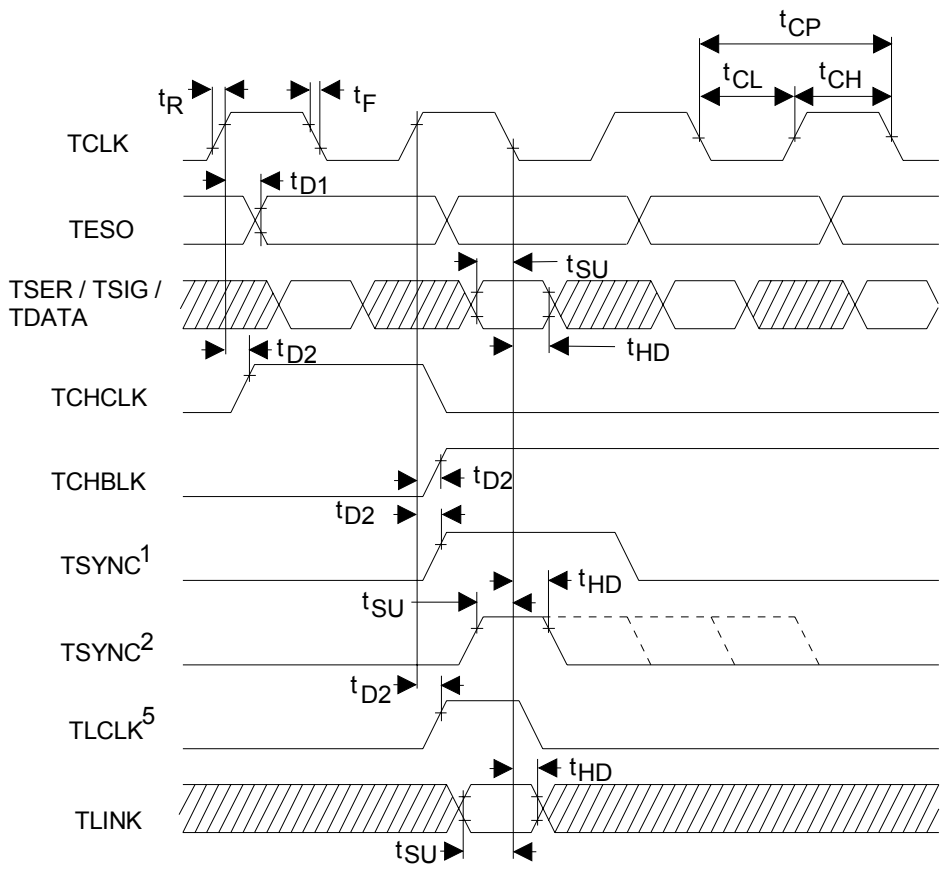

Note 1: TSYNC is in the output mode (IOCR1.1 = 1).

Note 2: TSYNC is in the input mode (IOCR1.1 = 0).

Note 3: TSER is sampled on the falling edge of TCLK when the transmit-side elastic store is disabled.

Note 4: TCHCLK and TCHBLK are synchronous with TCLK when the transmit-side elastic store is disabled.

Note 5: In E1 mode, TLINK is only sampled during Sa bit locations as defined in E1TCR2; no relationship between TLCLK/TLINK and TSYNC is implied.

Figure 37-13. Transmit-Side Timing, Elastic Store Enabled

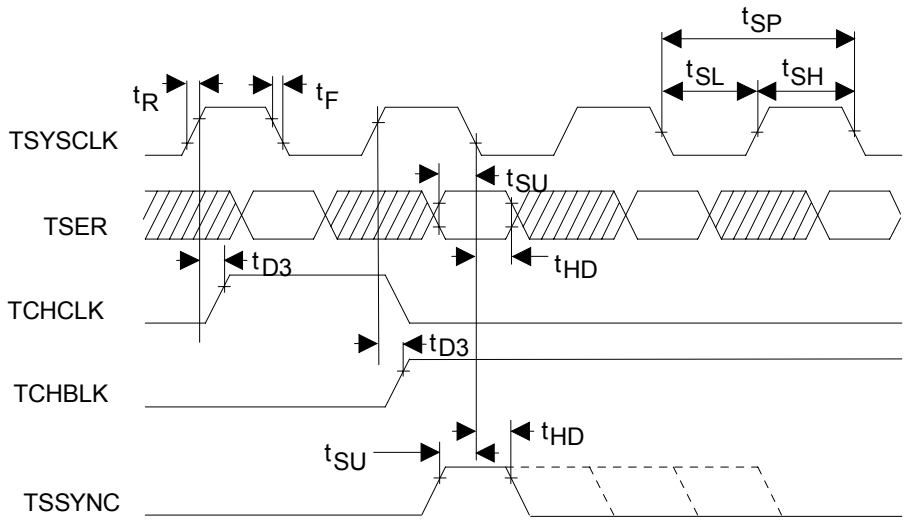

Note 1: TSER is only sampled on the falling edge of TSYSCLK when the transmit-side elastic store is enabled.

Note 2: TCHCLK and TCHBLK are synchronous with TSYSCLK when the transmit-side elastic store is enabled.

Figure 37-14. Transmit Line Interface Timing

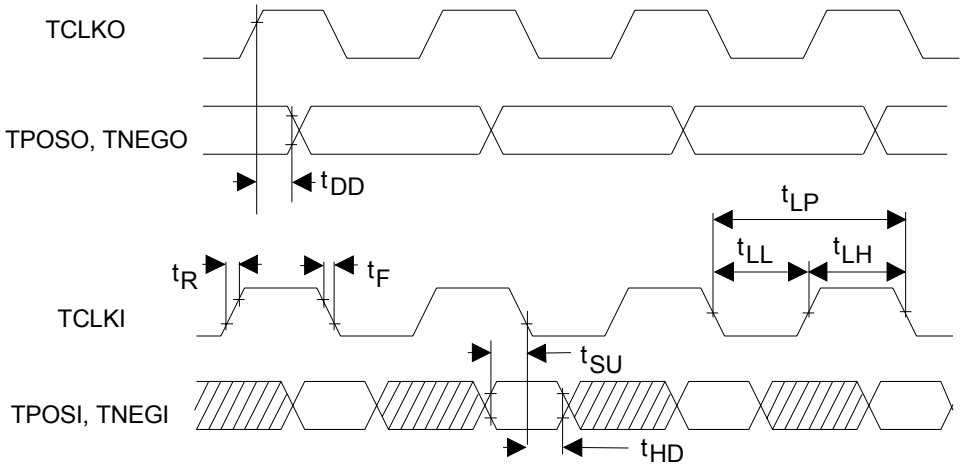

38. PACKAGE INFORMATION

(The package drawing(s) in this data sheet may not reflect the most current specifications. The package number provided for each package is a link to the latest package outline information.)

38.1 100-Pin LQFP (56-G5002-000)

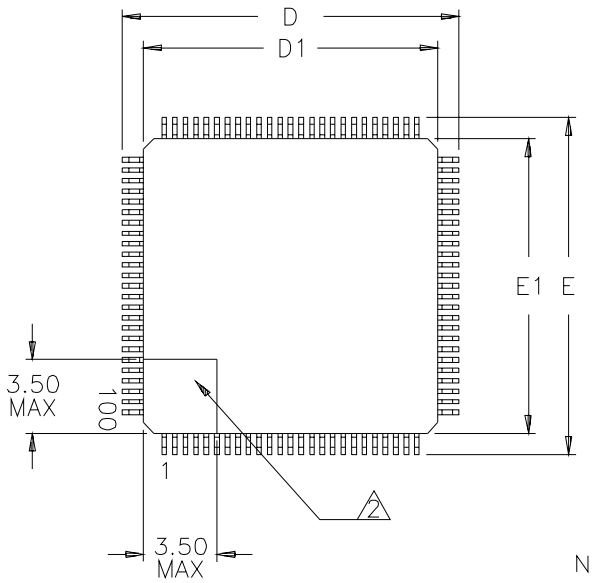

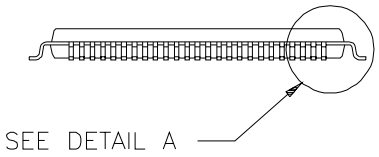

NOTES:

1. DIMENSIONS D1 AND E1 INCLUDE MOLD MISMATCH, BUT DO NOT INCLUDE MOLD PROTRUSION; ALLOWABLE PROTRUSION IS 0.25 MM PER SIDE.
2. DETAILS OF PIN 1 IDENTIFIER ARE OPTIONAL BUT MUST BE LOCATED WITHIN THE ZONE INDICATED.
3. ALLOWABLE DAMBAR PROTRUSION IS 0.08 MM TOTAL IN EXCESS OF THE b DIMENSION; PROTRUSION NOT TO BE LOCATED ON LOWER RADIUS OR FOOT OF LEAD.
4. ALL DIMENSIONS ARE IN MILLIMETERS.

DIM	MIN	MAX
A	–	1.60
A1	0.05	–
A2	1.35	1.45
b	0.17	0.27
c	0.09	0.20
D	15.80	16.20
D1	14.00 BSC	
E	15.80	16.20
E1	14.00 BSC	
e	0.50 BSC	
L	0.45	0.75

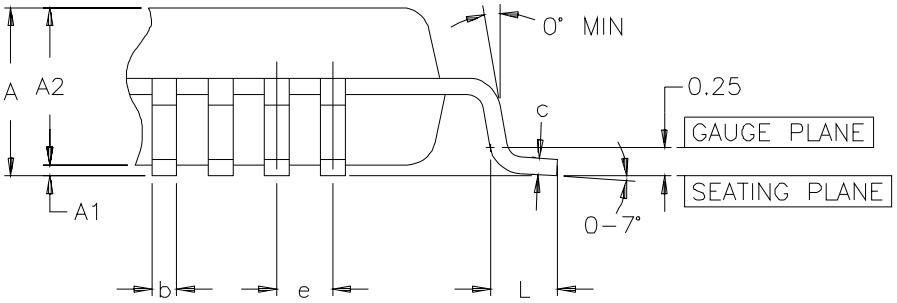

DETAIL A

38.2 100-Ball CSBGA (56-G6008-001)

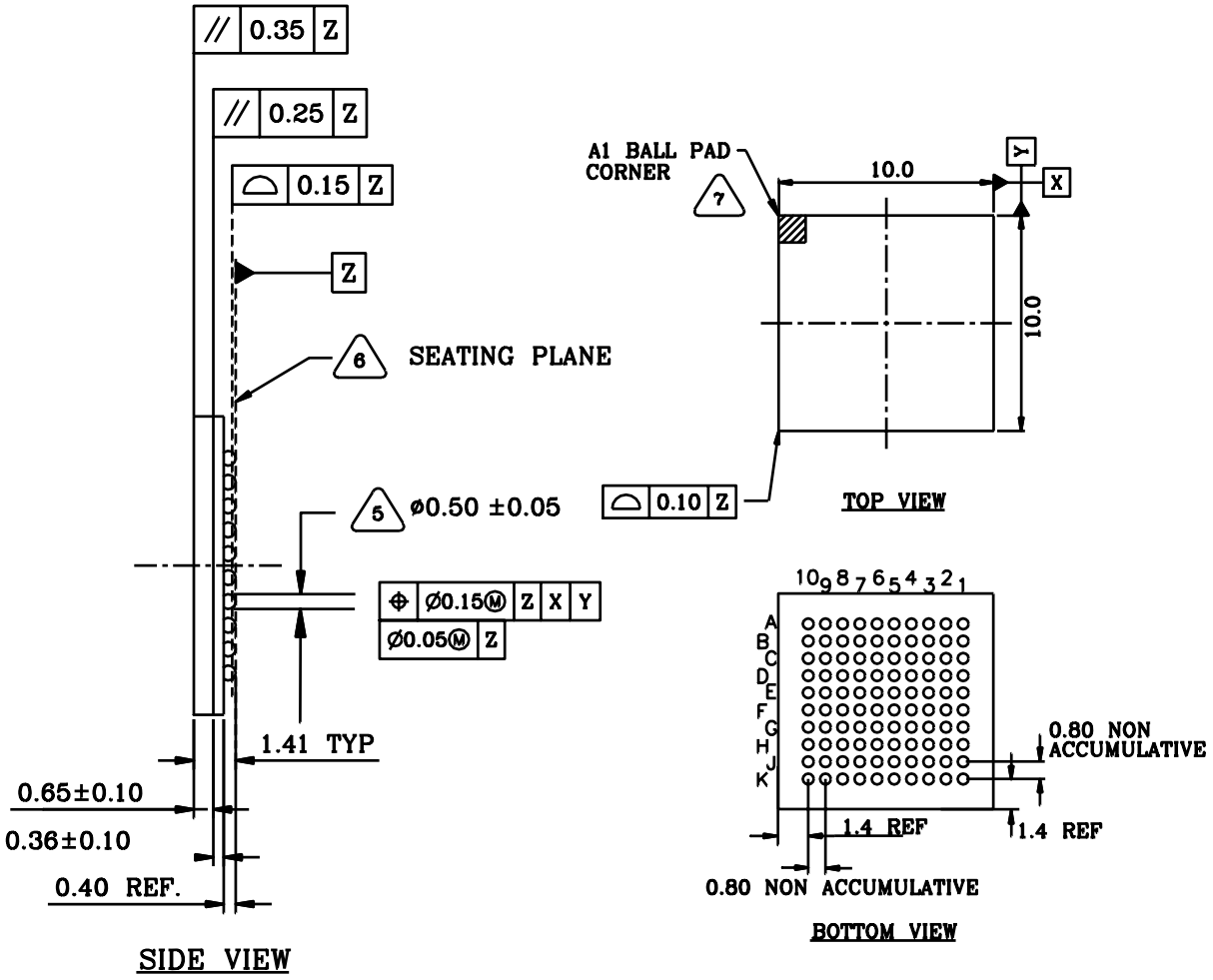

NOTES:

7. A1 BALL PAD CORNER I.D. IS IDENTIFIED BY LASER MARKED DOT AT THE CORNER.
6. PRIMARY DATUM Z AND SEATING PLANE ARE DEFINED BY THE SPHERICAL CROWNS OF THE SOLDER BALLS.
5. DIMENSION IS MEASURED AT THE MAXIMUM SOLDER BALL DIAMETER, PARALLEL TO PRIMARY DATUM Z.
4. BILATERAL TOLERANCE ZONE IS APPLIED TO EACH SIDE OF THE PACKAGE BODY.
3. SOLDER BALL POSITION DESIGNATION PER JESD 95-1, SPP-010.
2. ALL DIMENSIONS AND TOLERANCES CONFORM TO ANSI Y14.5M-1994.
1. ALL DIMENSIONS ARE IN MILLIMETERS

Maxim/Dallas Semiconductor cannot assume responsibility for use of any circuitry other than circuitry entirely embodied in a Maxim/Dallas Semiconductor product. No circuit patent licenses are implied. Maxim/Dallas Semiconductor reserves the right to change the circuitry and specifications without notice at any time.

Maxim Integrated Products, 120 San Gabriel Drive, Sunnyvale, CA 94086 408-737-7600

© 2007 Maxim Integrated Products

The Maxim logo is a registered trademark of Maxim Integrated Products, Inc. The Dallas logo is a registered trademark of Dallas Semiconductor.